VEVOR

Upgrade · The Home Creator Way

DRUM FAN

MODEL: HIFANXDRUM24

VEVOR Support Center

1	HIFANXDRUM24(US-MECHANICAL TIMING)		2	HIFANXDRUM24(EU-MECHANICAL TIMING)	
3	HIFANXDRUM24(US)		4	HIFANXDRUM24(EU)	

MODEL: HIFANXDRUM24



This is the original instruction, please read all manual instructions carefully before operating. VEVOR reserves a clear interpretation of our user manual. The appearance of the product shall be subject to the product you received. Please forgive us that we won't inform you again if there are any technology or software updates on our product.

Warning-To reduce the risk of injury, user must read instructions manual carefully.

The product complies with relevant standards and regulations.
Installation of this device must comply with all applicable regulations, and it

should only be operated in well-ventilated areas. Please read the user manual before installing and using this equipment.

This appliance is not intended for use by persons (including children) with reduced physical, sensory or mental capabilities, or lack of experience and knowledge, unless they have been given supervision or instruction concerning use of the appliance by a person responsible for their safety.

This appliance shall not be used by children. Keep the appliance and its cord out of reach of children.

This appliance is intended to be used in household and similar applications such as:
– staff kitchen areas in shops, offices and other working environments;
– farm houses;
– by clients in hotels, motels and other residential type environments;
– bed and breakfast type environments.

Please properly keep product. Check whether the product is abnormal before use. If it is abnormal, please stop using it.

Please use the product according to the intended use, warn of potential injury from misuse.



CORRECT DISPOSAL

This product is subject to the provision of european Directive 2012/19/EU. The symbol showing a wheelie bin crossed through indicates that the product requires separate refuse collection in the European Union. This applies to the product and all accessories marked with this symbol. Products marked as such may not be discarded with normal domestic

waste, but must be taken to acollection point for recycling electrical and electronic devices.

Secure the fan using expansion bolts during installation to prevent loosening or falling during operation, which may cause injury.
The power socket must be equipped with a residual current device (RCD).
Ensure the power is disconnected before wiring, and have the connection performed by a qualified electrician.
Children under 8 years of age and persons with physical or mental impairments must use this appliance under adult supervision. Do not allow children to play with the appliance or approach it while in operation.
Never insert fingers, pencils, or any other objects through the guard while the fan is running to prevent personal injury or equipment damage.
Unplug the power cord before cleaning. Clean plastic parts with mild soap and a damp cloth. Avoid getting water or other liquids into the motor.
Do not leave the fan running unattended. Unplug the power cord when not in use for extended periods.
When unplugging, hold the plug itself. Do not pull the power cord, as this may damage the wire and cause leakage or electric shock.

Save This Manual

Intended Use

This product is intended for industrial or other commercial applications use only with electrical wiring that is in good working order and that meets applicable codes and ordinances. If you have any questions whether your wiring is adequate, consult a qualified electrician.
While using your fan , you should follow the IMPORTANT INSTRUCTIONS listed below . As part of those instructions , we have used the word

"WARNING" to indicate the level of hazard: WARNING indicates a hazard which if not avoided could result in injury or death.

IMPORTANT INSTRUCTIONS

As with all electrical appliances, basic safety precautions should always be followed to reduce the risk of electric shock, fire, or injury to persons, including the following precautions:
Read all the instructions before using this fan.
Use this fan only as described in this manual. Any other use not recommended by the manufacturer may cause electrical shock, fire or injury to persons.
Do not operate the fan with a damaged power cord or after the fan malfunctions or has been dropped in any manner.
Use of extreme caution is necessary when any fan is used by or near children, disabled persons or pets and whenever the fan is left operating unattended .
Do not place the fan on a small, unlevel, uneven or any surface which might allow fan to tip or fall.
For proper operation, fan should be placed on a smooth, non-combustible, level surface.
Always unplug fan when not in use, when moving from place to place, when assembling or disassembling parts, and before cleaning.
The use of attachments, not recommended or sold by the manufacturer, may cause hazards.
Do not use outdoors.
Do not use fan in window. Rain may cause electrical hazard (for non-window models).
Do not operate the fan with blade guards or any safety device removed.
Avoid the use of extension cords due to risk of fire. If an extension cord must be used the cord must be minimum 14 AWG and rated not less then 1875 watts.

Do not run power cord under carpeting.
Do not cover cord with throw rugs, runners or the like Arrange cord away from traffic area where it will not be tripped over.
Do not insert or allow any object to enter any openings on the fan. Doing so may cause electric shock and / or fire hazard. Avoid contact with moving parts .
This appliance is not intended for use by persons (including children) with reduced physical, sensory or mental capabilities or lack of experience and knowledge, unless they have been given supervision or instruction concerning use of the appliance by a person responsible for their safety. Children should be supervised to ensure they do not play with the appliance.

READ& SAVE THESE INSTRUCTIONS

WARNING: Shock Hazard
Use your fan only in dry environments. This fan is not intended for use in a bathroom, laundry area, or similar locations, or near sinks, washing machines, swimming pools or other sources of water. Never locate fan where it may fall into a bathtub or other water receptacle. Do not use in damp environments such as flooded basements.
WARNING: Hot Surfaces
Do not touch fan motor when in use. This motor is hot when in use. To avoid burns , do not let bare skin touch hot surfaces.
WARNING: Fire Hazard
Fans have arcing or sparking parts inside. Do not use near combustible materials or flammable gases or sources of heat.
DO NOT USE in areas where gasoline, paint or flammable materials are used or stored. To prevent a possible fire, do not block air intakes or exhaust in any manner. Do not insert or allow foreign objects to enter any ventilation or exhaust opening as this may cause an electric shock, fire, or damage the fan.

WARNING: Electrical Shock Hazard
Do not use with damaged cord or plug. Use with adequate electrical system that is up to code.
CAUTION: To Prevent Electric Shock, this product has a three prong grounded plug that must be inserted into a matching properly grounded outlet to reduce the risk of electrical shock. Do not attempt to defeat this safety feature.
WARNING: To Reduce the Risk of Fire or Electric Shock, do not use this product with any solid-state speed control device.
Usage:
Fan Operation: Always operate the fan in the upright position following all instructions and recommendations listed in this manual.
Fan Location: Place the fan in the area of the room that will provide proper fan cooling.
Fan Connection: Be sure plug fits tightly in outlet. A loose connection may cause overheating and damage to the plug or fan.
NOTE: To prevent overloading a circuit, do not plug the fan into a circuit that is servicing other electrical needs.
Turning Fan On: Place fan on stable level surface. Plug fan into properly grounded outlet. To start the fan, turn the switch from the OFF position to the desired fan speed.
Turning Fan Off: To turn the fan off, turn the switch from the current fan speed setting to the off position. Remove plug from outlet.
Adjusting Fan Tilt: To adjust the tilt angle, use supplied knob wrench to loosen the adjustment screw. After adjustment, retighten the adjustment screw. Save knob wrench for future use.

Fan Assembly

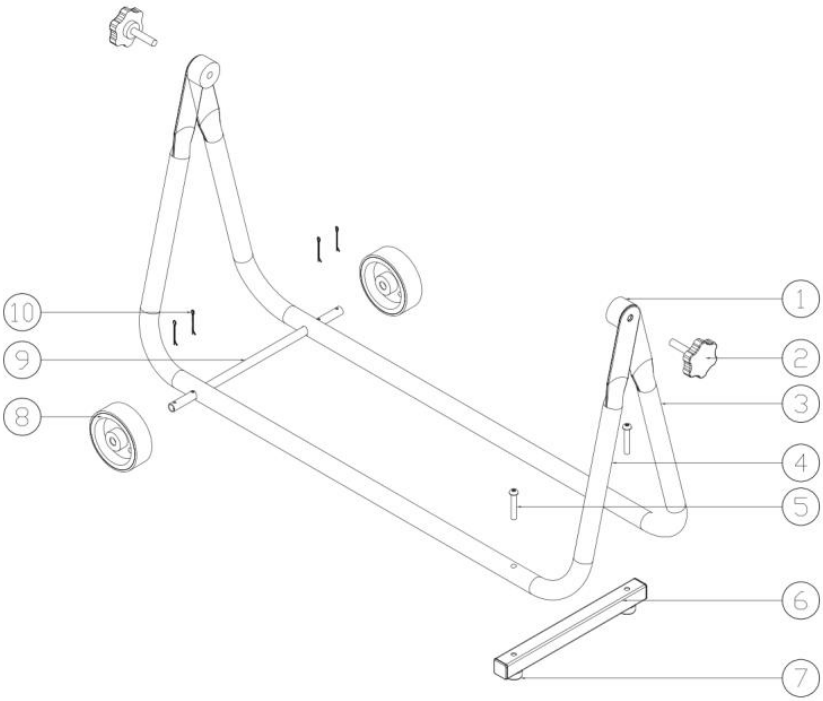
10
9
8
1
2
3
4
5
6
7

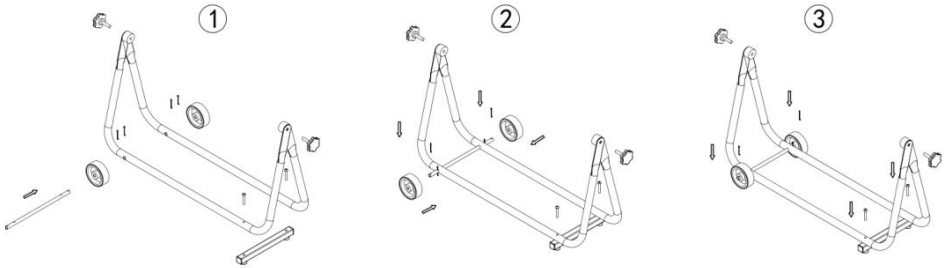
①
②
③

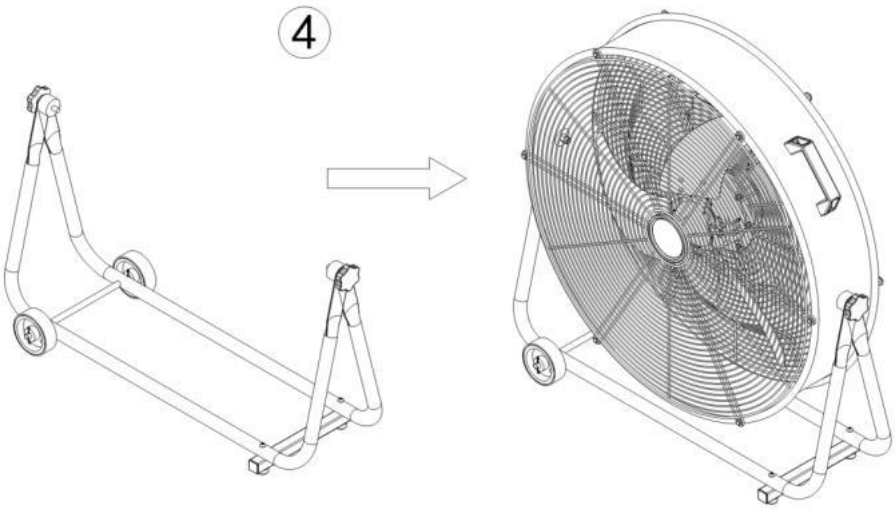

WARNING: There is one small hole on each side of the two cradle bases. The two small holes should be kept inner side and at the same directions.
WARNING: Castors must be installed before use.

Care and Maintenance

Cleaning: CAUTION-BEFORE cleaning the fan be sure to disconnect power cord from the plug. Clean the grille surface with a clean damp cloth. Do not use harsh chemical or abrasive cleaners. **DO NOT IMMERSE THE FAN OR ANY WIRES INWATER .** Replace front grille before fan use Allow fan to dry completely before use. Periodic grille cleaning with a vacuum will prevent dust build up. The motor is sealed and does not require any interior maintenance, cleaning or lubrication.

Maintenance: The Internal motor bearings are permanently lubricated at the factory and do not require any additional lubrication.

Repair: DO NOT OPERATE THE FAN WITHOUT THE GRILLE INPLACE . DO NOT USE THE FAN IF IT HAS MALFUNCTIONED ORBECOME DAMAGED IN ANY WAY.

Storage: Keep original carton for storage of the fan. Coil and tiethe power cord to avoid damage during storage.

Packing list		
NO.	Name & Specification	Quantity
1	Rubber pads	2
2	Plum hand screws	2
3	back support tubes	1
4	Front support tubes	1
5	Screw	2
6	Square tube	1
7	Rubber feet	2
8	Casters	2
9	Round tube	1
10	Open latches	4

Bote electric appliance (Guangdong) Co., Ltd
5th floor, No.28, area 1, Sanlian Industrial Zone, Gulao Town, Heshan City, JIANGMEN, Guangdong
E-mail: support@vevor.com

