VEVOR

Upgrade · The Home Creator Way

DIAMOND CORE DRILL

MODEL:Z1Z-9230

VEVOR Support Center

1	Z1Z-9230 (US)		2	Z1Z-9230 (EU)	
3	Z1Z-9230 (AU)		4	Z1Z-9230 (UK)	

VEVOR | Upgrade
The Home Creator Way

MODEL:Z1Z-9230

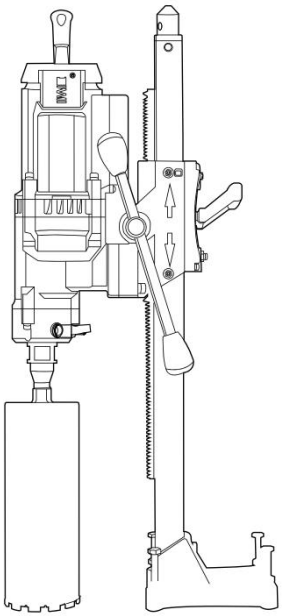

This is the original instruction, please read all manual instructions carefully before operating. VEVOR reserves a clear interpretation of our user manual. The appearance of the product shall be subject to the product you received. Please forgive us that we won't inform you again if there are any technology or software updates on our product.



The symbols used in this manual are intended to alert you of the possible risks.

Please fully read the safety signs and instructions below.

The warning themselves do not prevent the risks and can not be a substitute for proper methods of avoiding accidents.



This symbol, placed before a safety comment, indicates a kind of precaution,waning, or danger. Ignoring this warning may lead to an accident. To reduce the risk of injury, fire, or electrocution, please always follow the recommendations shown below.



WARNING- To reduce the risk of injury, users must read the instruction manual carefully.

Please refer to the appropriate section in this user manual before any operation.



Warning- Be sure to wear eye protectors when using this product.



WARNING- Be sure to wear dust masks when using this product.



Warning- Be sure to wear ear protectors when using this product.



This product is subject to the provision of European Directive 2012/19/EC. The symbol showing a crossed-out wheeled bin indicates that the product requires separate refuse collection in the European Union. This symbol applies to the product and all accessories marked with this symbol. Products marked as such may not be discarded with normal domestic waste, but must be taken to a collection point for recycling electrical and electronic devices.



This device complies with Part 15 of the FCC Rules. Operation is subject to the following two conditions:(1) This device may not cause harmful interference,and (2) this device must accept any interference received, including interference that may cause undesired operation.



This product is of protection class II. That means it is equipped with enhanced or double insulation.

Please read these instructions carefully before using.



WARNING! To reduce the risk of injury, user must read instruction manual

1. General Power Tool Safety Warnings



WARNING Read all safety warnings and all instructions. *Failure to follow the warnings and instructions may result in electric shock, fire, and/or serious injury*.

The product complies with relevant standards and regulations. Installation of this device must comply with all applicable regulations, and it should only be operated in well-ventilated areas. Please read the user manual before installing and using this equipment.

Save all warnings and instructions for future reference.

The term "power tool" in the warnings refers to your mains-operated (corded) power tool or battery-operated (cordless) power tool.

1) **Work area safety**

a) **Keep work area clean and well lit**. *Cluttered or dark areas invite accidents.*

b) **Do not operate power tools in explosive atmospheres, such as in the presence of flammable liquids, gases or dust.** *Power tools create sparks which may ignite the dust or fumes.*

c) **Keep children and bystanders away while operating a power tool.** *Distractions can cause you to lose control.*

e) This appliance is not intended for use by persons (including children) with reduced physical, sensory or mental capabilities, or lack of experience and knowledge, unless they have been given supervision or instruction concerning use of the appliance by a person responsible for their safety.

f) Children shall not play with the appliance.

g) This appliance shall not be used by children. Keep the appliance and its cord out of reach of children.

2) **Electrical safety**

a) **Power tool plugs must match the outlet. Never modify the plug in any way. Do not use any adapter plugs with earthed (grounded) power tools.** *Unmodified plugs and matching outlets will reduce risk of electric shock.*

b) **Avoid body contact with earthed or grounded surfaces, such as pipes, radiators, ranges and refrigerators.** *There is an increased risk of electric shock if your body is earthed or grounded.*

c) **Do not expose power tools to rain or wet conditions.** *Water entering a power tool will increase the risk of electric shock.*

d) **Do not abuse the cord. Never use the cord for carrying, pulling or unplugging the power tool. Keep cord away from heat, oil, sharp edges or moving parts.** *Damaged*
or entangled cords increase the risk of electric shock.

e) **When operating a power tool outdoors, use an extension cord suitable for outdoor use.** *Use of a cord suitable for outdoor use reduces the risk of electric shock.*

f) **If operating a power tool in a damp location is unavoidable, use a residual current device (RCD) protected supply.** *Use of an RCD reduces the risk of electric shock.*

WARNING: Only use the supply unit provided with this appliance.

WARNING: Use only an external supply with the following specifications: <voltage and nature of supply> <power / current of supply>

3) **Personal safety**

a) **Stay alert, watch what you are doing and use common sense when operating a power tool. Do not use a power tool while you are tired or under the influence of drugs, alcohol or medication.** *A moment of inattention while operating power tools may result in serious personal injury.*

b) **Use personal protective equipment. Always wear eye protection.** *Protective equipment such as dust mask, non-skid safety shoes, hard hat, or hearing protection used for appropriate conditions will reduce personal injuries.*

c) **Prevent unintentional starting. Ensure the switch is in the off-position before connecting to power source and/or battery pack, picking up or carrying the tool.**

Carrying power tools with your finger on the switch or energizing power tools with the switch on invites accidents.

d) **Remove any adjusting key or wrench before turning the power tool on.** *A wrench or a key left attached to a rotating part of the power tool may result in personal injury.*

e) **Do not overreach. Keep proper footing and balance at all times.** *This enables better control of the power tool in unexpected situations.*

f) **Dress properly. Do not wear loose clothing or jewellery. Keep your hair, clothing and gloves away from moving parts.** *Loose clothes, jewellery or long hair can be caught in moving parts.*

g) **If devices are provided for the connection of dust extraction and collection facilities, ensure these are connected and properly used.** *Use of dust collection can reduce dust-related hazards*.

4) **Power tool use and care**

a) Do not force the power tool. Use the correct power tool for your application. The correct power tool will do the job better and safer at the rate for which it was designed.
b) Do not use the power tool if the switch does not turn it on and off. Any power tool that cannot be controlled with the switch is dangerous and must be repaired.
c) Disconnect the plug from the power source and/or remove the battery pack, if detachable, from the power tool before making any adjustments, changing accessories, or storing power tools. Such preventive safety measures reduce the risk of starting the power tool accidentally.
d)Switch off the appliance and disconnect from supply before changing accessories or approaching parts that move in use.
e)always disconnect the appliance from the supply if it is left unattended and before assembling, disassembling or cleaning
f) Store idle power tools out of the reach of children and do not allow persons unfamiliar with the power tool or these instructions to operate the power tool. Power tools are dangerous in the hands of untrained users.
g)Please properly keep product. Check whether the product is abnormal before use. If it is abnormal, please stop using it.
h)Please use the product according to the intended use, warn of potential injury from misuse.
i) Maintain power tools and accessories. Check for misalignment or binding of moving parts, breakage of parts and any other condition that may affect the power tools operation. If damaged, have the power tool repaired before use. Many accidents are caused by poorly maintained power tools.
j) Keep cutting tools sharp and clean. Properly maintained cutting tools with sharp cutting edges are less likely to bind and are easier to control.
k) Use the power tool, accessories and tool bits etc. in accordance with these instructions, taking into account the working conditions and the work to be performed. Use of the power tool for operations different from those intended could result in a hazardous situation.
l) Keep handles and grasping surfaces dry, clean and free from oil and grease. Slippery handles and grasping surfaces do not allow for safe handling and control of the tool in unexpected situations.

m) Please confirm the number of voltage volts before use. The working voltage is not more than ±5%. If it is more than that, it will cause motor burning and leakage accidents.
n) During construction, please pay attention to avoid water entering the motor or blocking the ventilation hole, so as not to reduce the heat dissipation performance of the motor and cause the motor to burn down.
o) In the steel plate construction, please pay attention to the safety of the lower layer of personnel and goods, iron beam and column drilling, pay attention to the safety of the structure of the building.
p) In suspension operation, the safety belt must be tightly tied and the magnetic drill fixed to prevent sudden power failure or power failure caused by accidents.
q) Do not cut the power cord or change the plug yourself. This will cause the machine to burn out.

2. Diamond Core Drill Safety Warnings

DANGER (Imminent hazard, death/serious injury)
Risk of electric shock. Do not allow water to enter the motor housing, power switch or power cable. Always use an RCD/GFCI protected power supply.
Rotating core bit may cause severe laceration or entanglement. Keep hands, clothing and body parts away from the working area at all times.
Flying debris may result in fatal injury. Never stand in the drilling ejection path.
WARNING (Potential hazard, may cause death/serious injury)
Read all instruction manuals, safety warnings and specifications before operation. Failure to comply may cause electric shock, fire and severe personal injury.
Always wear safety goggles, face shield, dust respirator, hearing protection, anti-slip safety shoes and heavy-duty work gloves.
Silica dust generated during concrete/masonry drilling causes serious respiratory diseases. Use dust extraction or wet drilling system for ventilation.
Secure the core drill firmly with anchor bolts or vacuum base. Do not operate the machine by hand holding only.
Check diamond core bit for cracks, damage or wear before use. Do not use defective or mismatched drill bits.
Operate at low initial speed with uniform vertical pressure. Do not overexert or tilt the drill to prevent bit jamming, breaking or kickback.

Disconnect the power supply before replacing accessories, maintenance, cleaning or moving the equipment.

Keep children and bystanders at a safe distance from the workplace. Do not use the tool when tired, sick or under alcohol/drug influence.

For wet drilling: control standard water flow, prevent water leakage onto electrical components to avoid electric hazard.

CAUTION (Minor injury or equipment damage)

Do not block motor cooling vents. Clean dust and debris regularly to prevent overheating.

Match the rotating speed to the core bit diameter and workpiece material.

Allow the machine to cool down before servicing or storage.

Unauthorized modification of the tool is prohibited. All repairs must be performed by qualified professional personnel.

1. **Use auxiliary handles supplied with the tool.** Loss of control can cause personal injury.

2. Consider work area environment: Don't use diamond core drill in damp or wet locations. Don't expose the diamond core drill to rain. Keep the work area well-lit. In particular, no flammable liquids or gases must be present. The series motor produces sparks during regular rotation. The sparks may cause the risk of fire.

3. Grounding of class I tools is necessary while in use to protect you from electric shock. Class I tools are equipped with an approved three-conductor cord and three-prong grounding-type plug. The green/yellow conductor in the cord is the grounding wire, one end of wire is in the grounding sign of outer tool shell, the other end of wire is connected with the ground wire of plug. Never connect the green/yellow wire to a live terminal.

4.  **Warning！ The socket must be fitted with grounding, don't insert class I tools into the socket without grounding.**

5. Use extension cords when tool is used outdoors or indoors, use special extension wire board. Use only three-conductor cord and with reliable grounding.

6. Take care of the downward direction in the high position, safety belt and safety cap, etc., are recommended.

7. In order to avoid unintentional electric shock, please check the grounding condition of electrified body in working area before operating, it is not allowed to

operate the tool under the uncertain condition, once the drill bit touched the electrified body in the wall, floorboard or baseboard, the electrified outer shell of drill may cause personal injuries.

8. The safety equipment is recommended when drilling on high the ceiling to avoid the drill core injuring the persons downstairs or damaging the property downstairs.

9. Connecting the soft pipe with the inner diameterΦ16mm to the adaptor of the valve.

10. Please ensure that there is no water leak so that it will not dampen the motor when you use the liquid and the attachments.

11. Usually inspect the hoses and other critical parts of the tool which could deteriorate. When a water leak appears from the testing hole of the gearbox, you must turn off the tool immediately and then replace the rubber seal.

12. Replacement of the plug or the supply cord shall always be carried out by the manufacturer of the tool or his service organization;

13. Keep liquid clear off the parts of the tool and away from persons in the working area in order that the water can not enter into the electronic equipment of the tool and keep your safety. It must be use catchment set when the machine working with elevation.

3. HANDLING INSTRUCTIONS

1.Securing the Drilling Rig

Securing the drilling rig firmly and stably is crucial for ensuring normal drilling operations. The expansion bolt method is commonly used for rig fixation.

1) Drill small holes at the expansion bolt mounting locations using a hammer drill according to the required drilling position. Insert expansion bolts and secure the drill rig base onto them.

Note: Expansion bolts need to be prepared by yourself

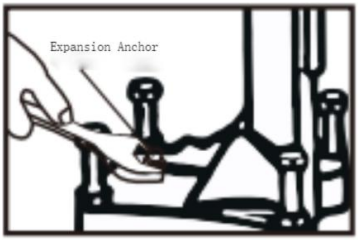

2) After securing, evenly tighten the bolts at the four corners of the base. Once the base is stable and level, lock the nuts to ensure full contact with the work surface and maintain the drill bit's vertical alignment.

2.Installing the Drill Bit

Carefully mount the diamond thin-wall drill bit, ensuring the tail thread matches the drill rig's output shaft thread. After tightening the drill bit, perform an idle test run. Only proceed with operations once the bit's rotational runout meets specifications.

Apply grease to the threaded section of the drill bit before use to facilitate removal.

If the tail thread does not match the drill rig's output shaft thread, use an adapter.

3. Check the voltage:

Make sure the voltage is the same as that indicated on the board of the tools, the voltage in the circuits should be kept at +/-5%.

4. How to install bit:

Installing the diamond-thin bit carefully, the end thread shall match with the end output shaft. The end thread should be smeared with grease first, after tightening the drill bit, let it idly run, make sure that its radial motion corresponds with the general requirement, then you can operate the drill.

5. There should be some water in the water switch of drill.

6. Material:

When drilling on the reinforced concrete, if the drill bit touches the steel bar, the current will suddenly increase, the motor will vibrate, and the bit will be overloaded.

At this time, the drill thrust should be reduced properly. The low current will have an adverse effect on the bit speed and the bit. If the gravel falls into the drill or the drill touches the steel bar, the drill can get stuck, causing high current and clutch slip. At this point, close the tool, remove the bit, and clean the clip notch. Wait 3 minutes for the bit to cool and then restart the switch to continue drilling. If the clutch continues to slip, please stop drilling and re-tighten the clutch.

7. Remove drill core:

When the drill bit almost drills through the floorboard or wall etc materials, be careful in reducing its drill speed to avoid drilling forcibly. When drilling again, please shut off the tool, remove the drill bit and clean its wall with water, after cleaning the chip, beat the drill slightly with the wood stick, be careful in removing the drill core and damaging the drill bit, then install the drill bit to continue operating.

8. Keep the motor ventilated and cool down:

During operating the ventilated notch of motor should not be clogged with dirt to avoid the higher temperature affecting the motor's life or burning down the winding.

9. Waterless operation is forbidden:

When operation, there should be plenty of water flow onto the surface of the drill bit to cool down, and the mud can be washed out to avoid damaging the drill bit and sealing washer.

10. Avoid dampening the motor:

Do keep the enclosure of the motor away from the water to avoid reducing its insulating performance or leaking electricity. Only use the machine with the direction of vertical downward!

11. Drill vibrated

The gap between the elevating body and square pipe and rack increased may cause the drill vibration. At this time, please shut off the tool, adjust the track lining or idle wheel on elevating body, and tighten some relative bolts to adjust it to proper gap.

12. When adjusting the speed, you must stop the machine before turning the knob. It is not allowed to turn the knob when the machine is working, otherwise the gear may be damaged.

4. STRUCTURE, FEATURE AND USAGE

Z1Z-9230 is a portable diamond core drill, suitable for diamond bits 20-230mm stand-alone. Equipped with safety friction clutch, it is easy to use, safe and reliable. Using the diamond thin-wall drill bit produced by our company, this equipment can drill a full range of reinforced concrete, brick, and other materials, with no dust, no vibration, high precision, fast drilling speed and other advantages. Widely used in construction, pipeline installation, road, bridge and engineering quality control, sampling and other fields.

5. MAIN TECHNICAL PARAMETER

Model	Z1Z-9230	
Rated voltage	220-230V~ For EU and AUS	120V~ For US
Rated frequency	50 Hz	60 Hz
Rated input power	3200 W	2500W
No – load speed	750r/min	
Max. Drilling Dia.	Φ203 mm	

6. MAINTENANCE

1) If the drill has any trouble, please send it to an authorized service center. It is not strictly allowed to dismantle or replace the parts optionally.

2) Please check the electric brush and commutator periodically. When the brush is worn about 7mm, it must be replaced. Only use the original, otherwise the commutator may be damaged and both brushes must be replaced at the same time. If you find serious sparks or serious wear and burn of the commutator during operation, please check and repair the commutator or replace a new rotor.

3) The drill should be checked and repaired periodically after used for a long time.

Items to be checked include: whether the electrical wire is good or not, the grounding is reliable or not, the inner wire, switch and plug works well or not, the insulating resistance of motor is safe or not, the stator and rotor are in short circuit or not, the bolts are loosened or not, please replace the lubricating oil and wearing parts etc.

4) Replace the rubber sealing washer in time. If water is found flowing in from the top of the bit after prolonged use, check and replace the seal gasket immediately. The gear in the gear case can use lubricating oil, if you find some lubricating oil penetrate the mid-cover air port, please replace the rubber sealing oil ring on the rotor spindle. The brand of special lubricating oil is 110# industrial gear oil. It is not allowed to use common engine oil.

5) Keep the drill clean and dry. If not in use, please clean the drill and keep it in a dry and clean place. When removing a drill bit, apply grease to the drill bit's spindle and the drill thread's connection to protect it.

6) Adjust safety clutch (When you find the friction of clutch becomes too small.

7. SOLUTION TO THE PROBLEMS DURING USING

Problems	Possible Reasons	Solution
Motor doesn't run when connecting power supply	1.Power supply disconnected 2.Switch breaker positioned 3.Brush ill contacting or running out 4.The winding of stator or rotor circuit	1.Check and connect power supply 2.Check and repair switch or replace improperly or ill contacting switch 3.Replace electric brush 4.Check or replace stator & rotor open circuit.
Heavy sparks and ring sparks occur on commutator of motor	1.Rotor winding is on short circuit or open circuit 2.Brush spring positioned improperly or ill contacting 3.Commutator worn seriously	1.Repair or replace rotor. 2.Adjust the spring pressure 3.Replace a new rotor
Drill vibrated	1.The base fixed loosened 2.The gap between elevating body and square rack	1.Reassemble and fix the frame 2.Adjust the gap

	largened 3.Elevating body and connecting bolts loosened	3.Check bolt
Drill speed is slow	1.Drill bit worn 2.Ceiling pouring quality is bad, there are grits or chips in gap 3.Drill vibrated 4.The nuts on the safety friction	1.Repair or replace drill bit 2.Stop the drill, remove the foreign materials from gap 3.Adjust and tighten connecting bolt. 4.Tightening nuts clutch loosened

8. STANDARD ACCESSORY

1.Electric brush	2 pieces
2.Inner hexagon spanner	3 pieces
3.4.25-inch Drill bit	1 piece
4.Open-end wrench	1piece
5.Nose handle	1 piece
6.Lifting body handle	1 piece
7.Ejector screw	1 piece
8.Anti-tipping pressing plate	2 pieces
9.Joystick	1 piece
10.Fixing handle screw	2 pieces
11.User manual	1 piece

9. MAIN PART LIST AND THE BREAKDOWN DRAWING

THE PARTS LIST OF Z1Z-9230 ENGINEERING DRILL

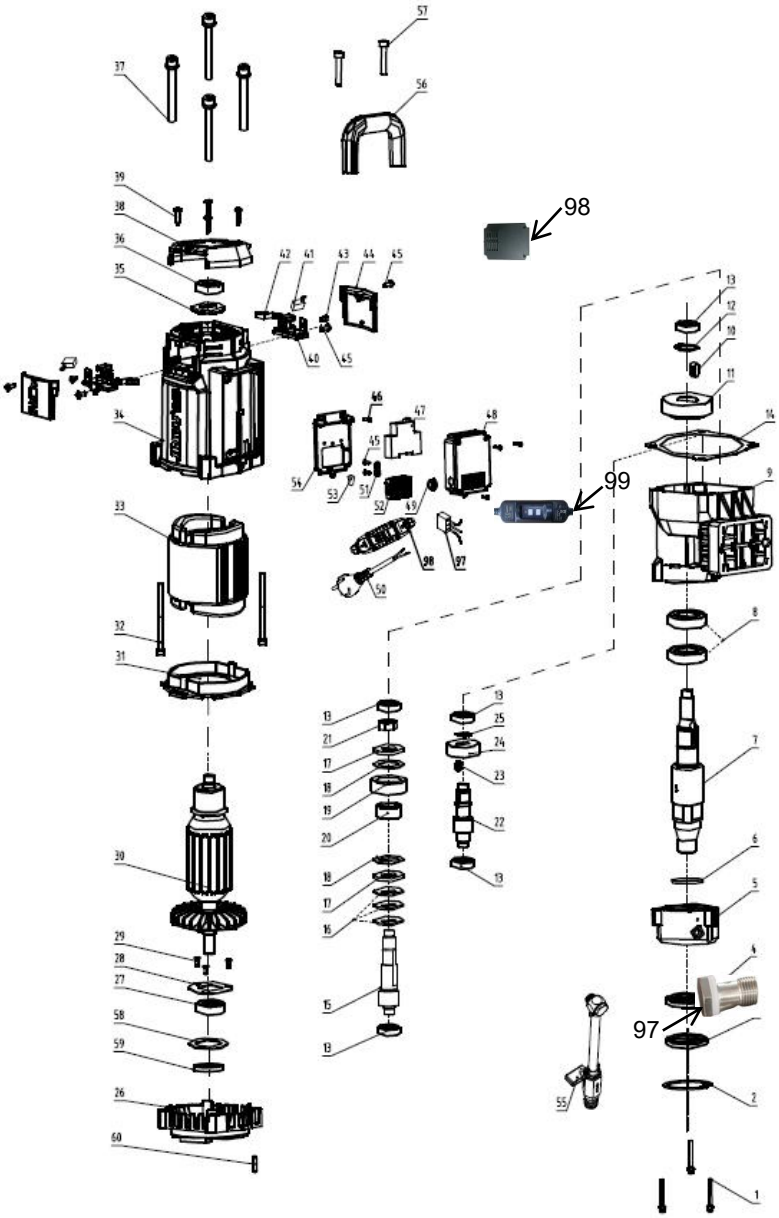

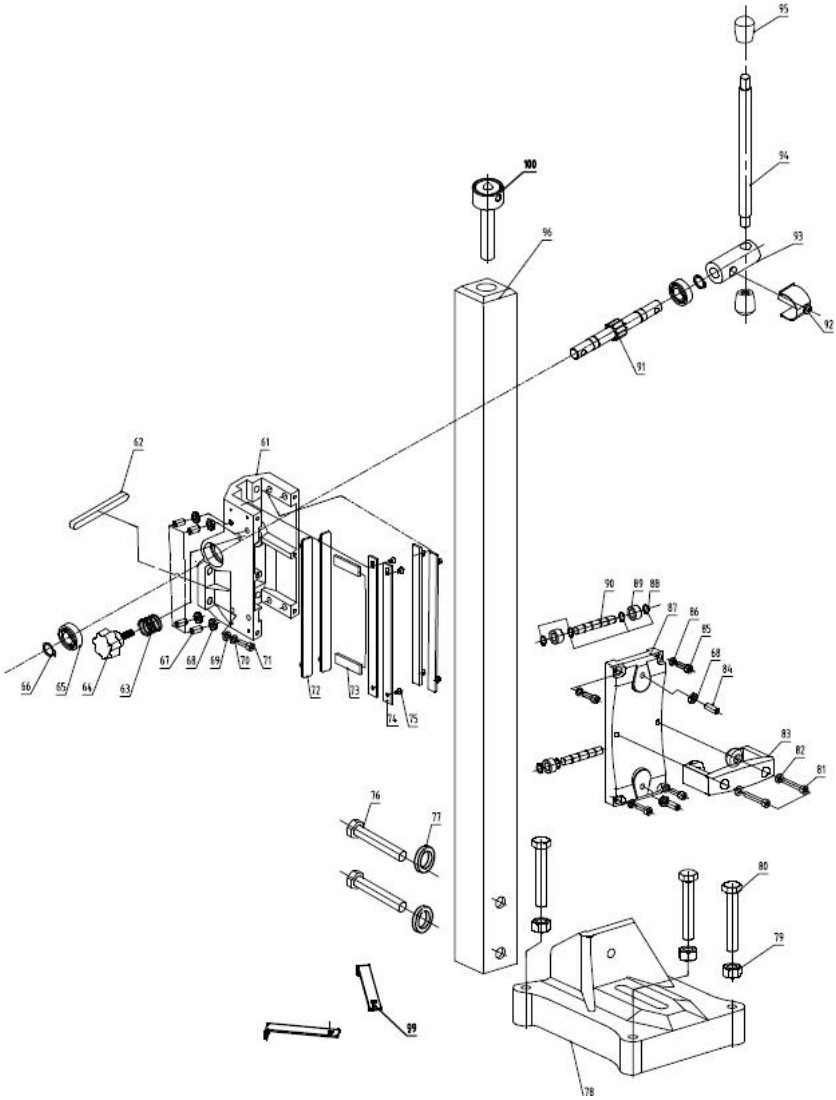

Part list for Z1Z-9230

NO.	Description	NO.	Description
1	Hexagon socket cylindrical head screw M5x30	51	Creasing board
2	Hole retaining ring φ62	52	Controller CF-9235(220V)
3	Skeleton oil seal φ38×62×8	53	Crimping cap /φ0.4

4	Skeleton oil seal φ38×60×8	54	Switch box cover (9235 Vitality Orange)
5	Water seal sleeve	55	Micro ball valve network management component
6	O-ring fluorine rubber φ38.8×3.1 ×45	56	Handle
7	Output shaft	57	Hexagon socket cylindrical head screw M6×35
8	Bearing 6005-2RZ	58	Gasket: 18*0.3*34.8
9	Transmission	59	Skeleton oil seal: 12x19x3
10	Flat key A8×18	60	Cylindrical pin φ4×12
11	Gear No. 6	61	02-205 Lifting body
12	Shaft retaining ring φ25	62	Flat key A10x8x100
13	Bearing 6001-2RS	63	Spring φ1xφ10x15
14	Sealing gasket	64	Seven-star handle
15	Gear shaft No. 5	65	Bearing 6003
16	Butterfly spring: 36×18×2	66	Shaft retaining ring 17
17	Retaining ring: 18×37.5×3.8	67	Hexagon socket flat-end set screw M8x20
18	Friction plates: 37.5×18.2×1.2	68	Hexagonal lock nut M8
19	Gear No. 4	69	Flat pad 8
20	Copper sleeve: 18×24×13.5	70	Elastic pad 8
21	All-metal anti-loosening nut M16× 1.5	71	Hexagon socket cylindrical head screw M8x30
22	Gear shaft	72	Track Block 1
23	Flat key A5×12	73	Lifting body top iron 1
24	Gear No. 2	74	Track strip
25	Shaft retaining ring D15	75	Cross countersunk screw M4x6
26	Middle cover	76	Hexagon head bolt M12x68
27	Bearing 6202-2RZ/Z1	77	Flat pad 12
28	Bearing pressure plate: 30×57× 1.8	78	Base

29	Cross flat machine screw M4×10	79	Hexagonal nut M12
30	Rotor	80	Hexagon head bolt M12x75
31	Wind shield	81	Hexagon socket cylindrical head screw M6x40
32	Hexagon socket cylindrical head screw M5×85	82	Flat pad 6 (Standard type, outer diameter φ12)
33	Stator	83	Lifting body handle
34	Casing	84	Hexagon socket flat-end set screw M8x25
35	Insulating gasket	85	Hexagon socket cylindrical head screw M6x20
36	Bearing 6201-2RS	86	Elastic pad 6
37	Hexagon socket cylindrical head screw M6×65	87	Lifting body cover plate
38	Back cover	88	Shaft retaining ring 10
39	Cross self-tapping screw ST4.2×19	89	Rotating wheel 10*18*10
40	Brush frame assembly	90	Pin shaft φ10*65
41	Brush Z1Z-8260 8×18×22	91	Operate the gear shaft
42	Coil spring	92	Joystick sleeve snap-on assembly
43	Large flat head screw M4×8	93	Operating rod sleeve (through hole)

44	Carbon brush cap	94	Rack operating lever
45	Cross self-tapping screw ST4.2×13	95	Elliptical bakelite handle cover M12
46	Switch box screw ST3.5x16	96	Column assembly
47	Switch (Delixi DZ47s D25)	97	Capacitor
48	Switch box (9235 Vitality Orange)	98	Large holes for leakage protection
49	Sheath	99	Anti-tipping pressure plate
50	Power cord	100	Top rod screw

