VEVOR

Upgrade · The Home Creator Way

GARDEN TRAILER

MODEL: BTC002C

VEVOR Support Center

BTC002C

GARDEN TRAILER

MODEL: BTC002C

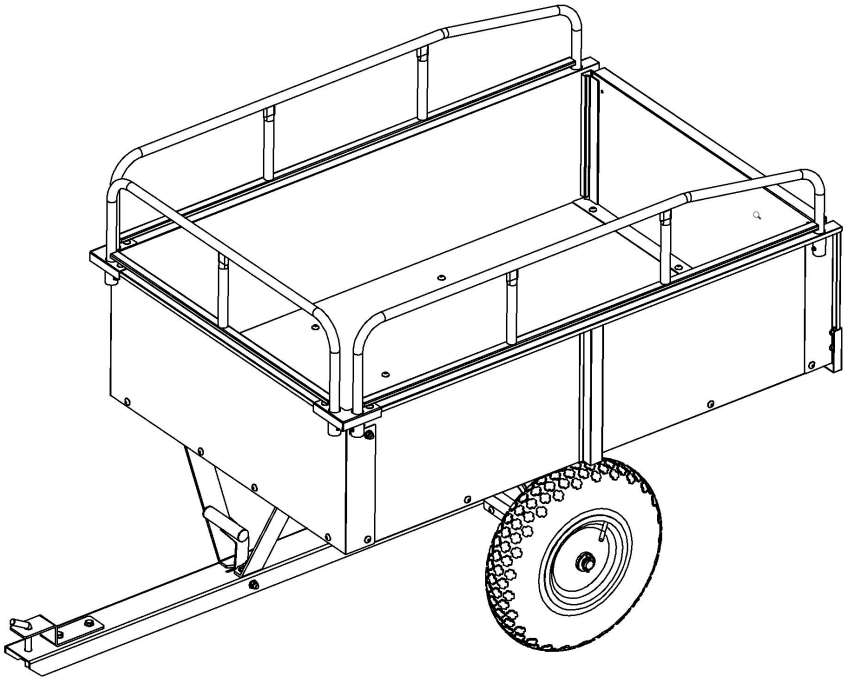

https://youtu.be/kmog4Ez0O8k

For the installation video, please scan the QR code to access.

This is the original instruction, please read all manual instructions carefully before operating. VEVOR reserves a clear interpretation of our user manual. The appearance of the product shall be subject to the product you received. Please forgive us that we won't inform you again if there are any technology or software updates on our product.

SAFETY INSTRUCTIONS

WARNING:
Read this material before using this product. Failure to do so can result in serious injury.

Assembly precautions

1. Assemble only according to these instructions. Improper assembly can create hazards.
2. Wear ANSI-approved safety goggles and heavy-duty work gloves during assembly.
3. Keep the assembly area clean and well-lit.
4. Keep bystanders out of the area during assembly.
5. Do not assemble if tired or when under the influence of alcohol, drugs or medication.
6. The product capabilities apply to properly and completely assembled products only.
7. Assemble on a flat, level, hard and smooth surface capable of safely supporting the Garden Trailer.
8. For additional information regarding the parts listed in the following pages, please refer to the Assembly Diagram of this manual. Unwrap and separate all parts in a clean work area.
9. It is estimated that the installation of this product can be completed in 20 minutes by 2 person.
10. Since a large number of screws are required for assembling this product, we have provided spare screws. Therefore, there is no need to worry if you have any remaining screws after completing the product assembly.
11. The product complies with relevant standards and regulations. Installation of this device must comply with all applicable regulations, and it should only be operated in well-ventilated areas. Please read the user manual before installing and using this equipment.
12. This appliance is not intended for use by persons (including children) with reduced physical, sensory or mental capabilities, or lack of experience and knowledge, unless they have been given supervision or instruction concerning use of the appliance by a person responsible for their safety.
13. This appliance is intended to be used in household and similar applications such as:

- staff kitchen areas in shops, offices and other working environments;
- farm houses;
- by clients in hotels, motels and other residential type environments;
- bed and breakfast type environments.

14. Please properly keep product. Check whether the product is abnormal before use. If it is abnormal, please stop using it

Use precautions

1. DO NOT SIT OR STAND ON THIS ITEM.
2. This product is not a toy. Do not allow children to play with or near this item.
3. Do not exceed specified weight capacities.
4. Use only on a flat, level, hard, and smooth surface that can safely support a fully loaded

Garden Trailer.

5. Use as intended only.
6. Inspect before every use; do not use if parts are loose or damaged.

SAVE THIS MANUAL

PARTS LIST

No.	Part	QTY.	No.	Part	QTY.
1	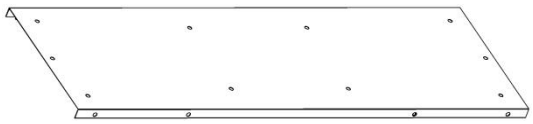	2	2	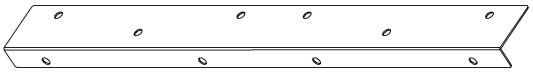	1
3	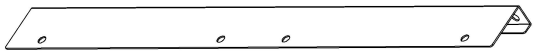	1	4	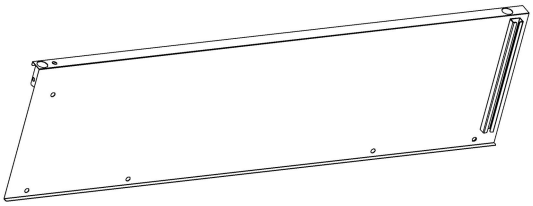	1
5	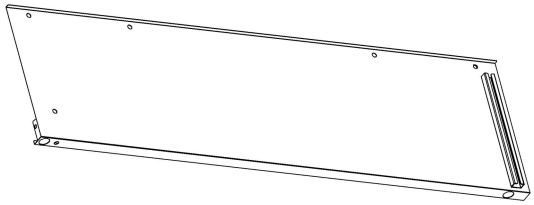	1	6	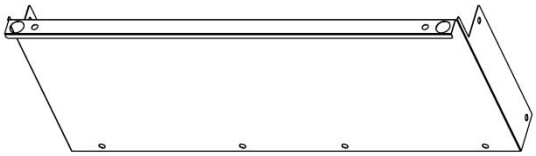	1
7	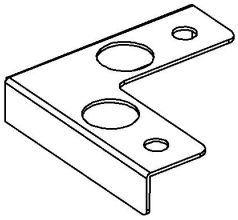	2	8	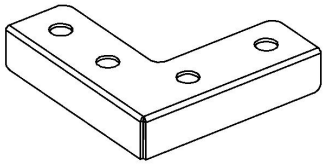	2
9	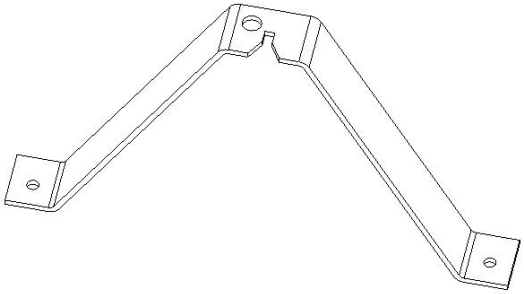	1	10	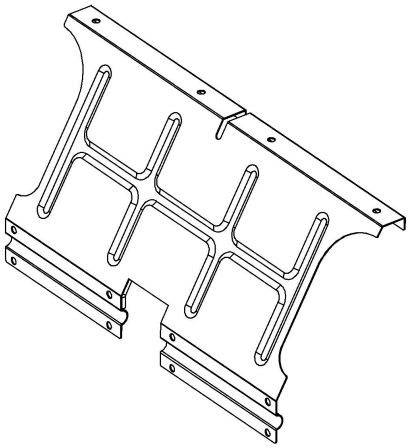	2
11		1	12	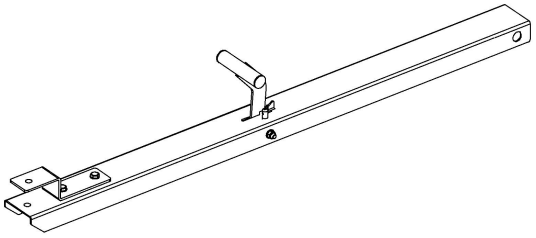	1
13	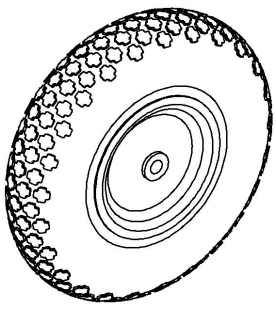	2	14	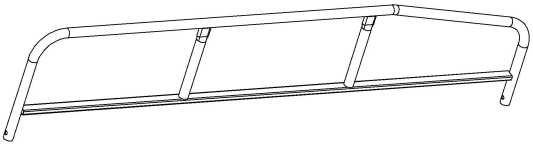	2

15	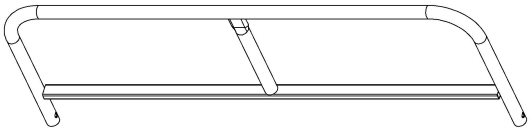	1	16	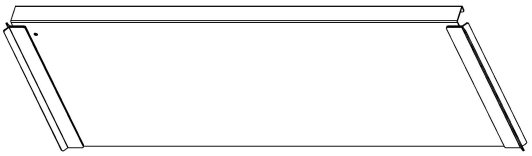	1
A	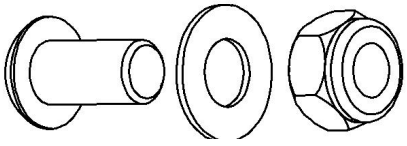 M8*15mm	54	B	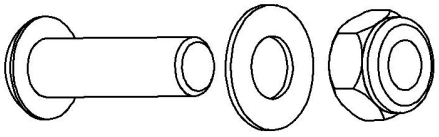 M8*30mm	2
C	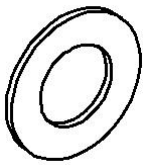	4	D	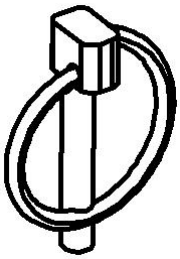	2
E		1	F		2
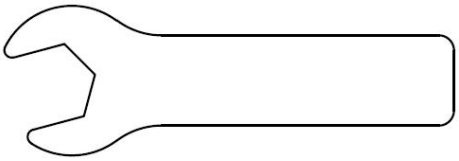		1			1

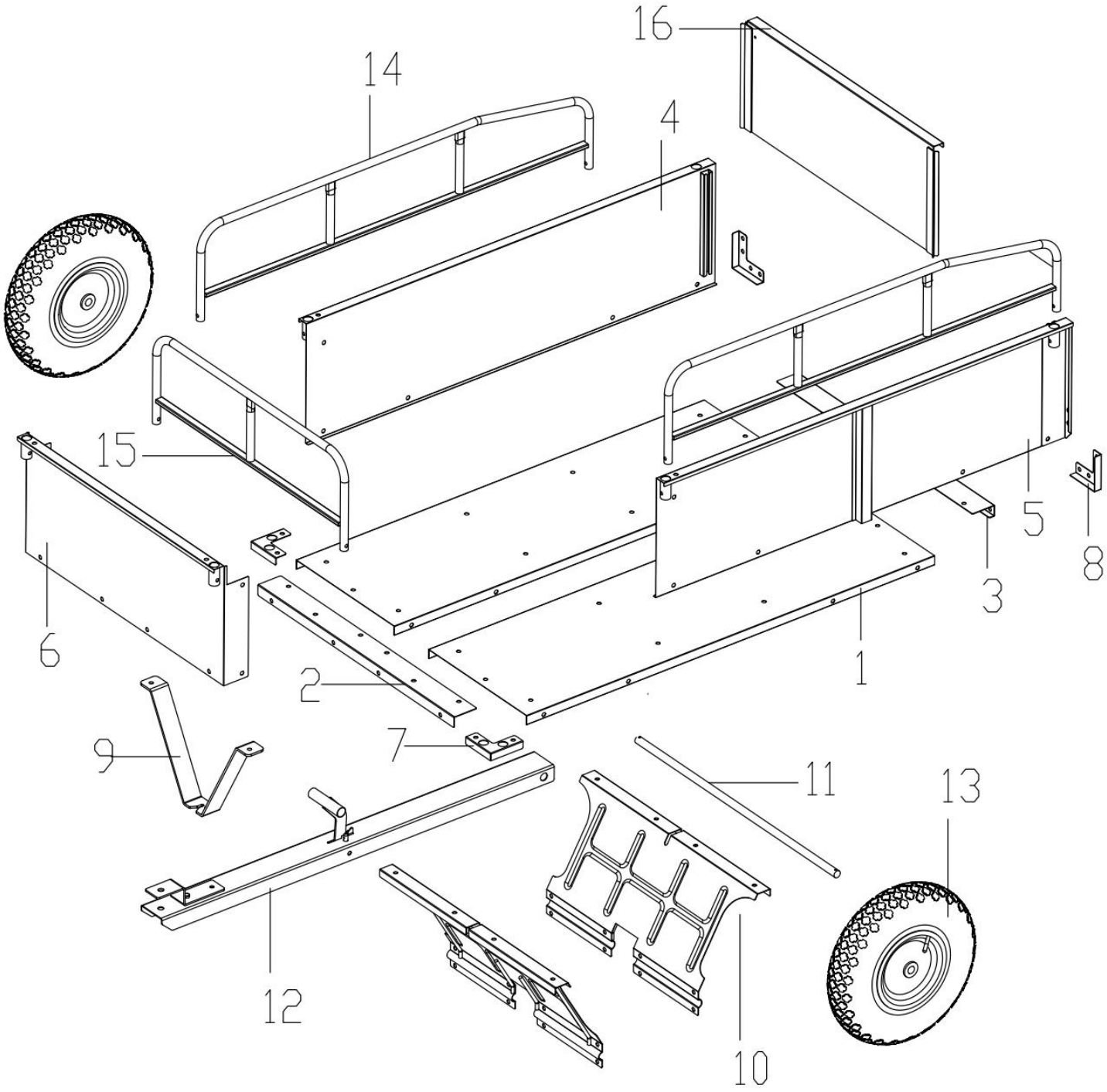
16
14
4
15
5
8
3
6
1
2
9
7
11
13
12
10

ASSEMBLY STEP

Step 1	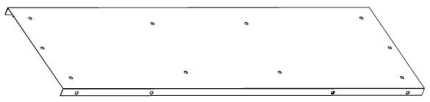 1 x2	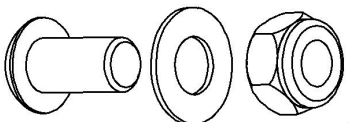 A x4

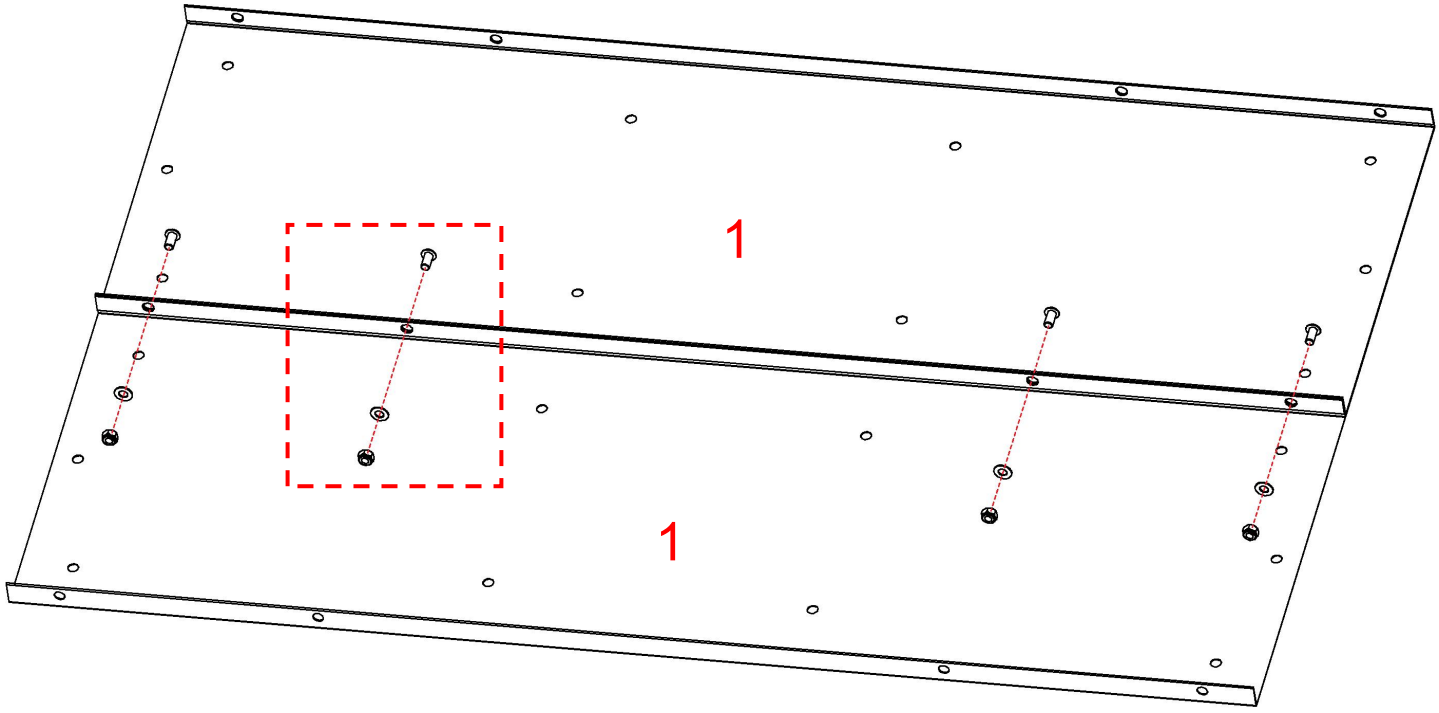

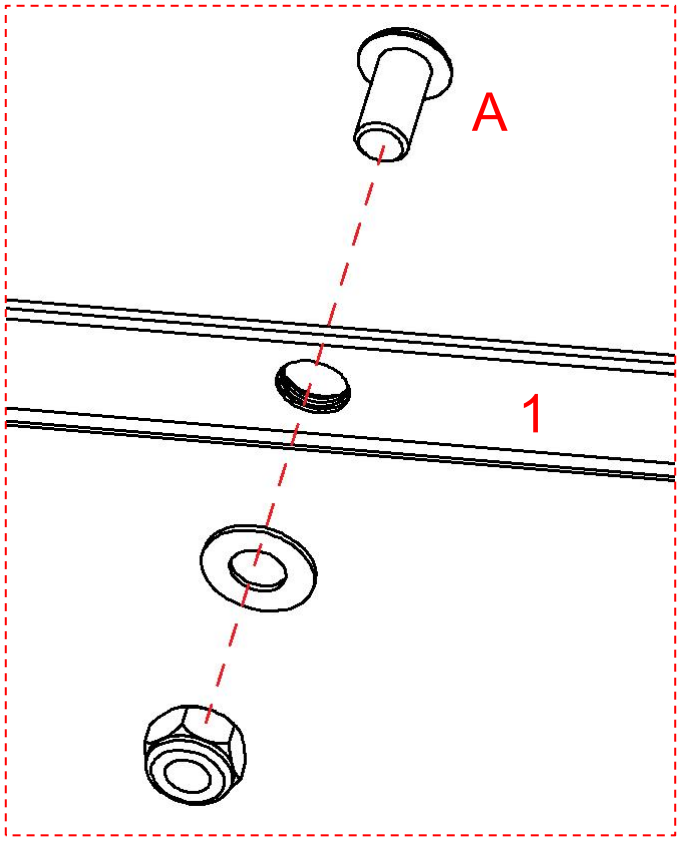

Close the two base plates(1 x2) and align them, then fasten them with screws(A).

Step 2

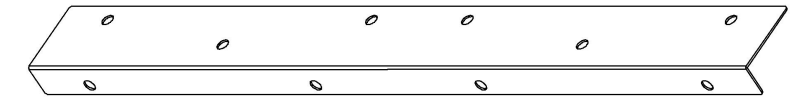

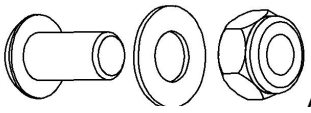

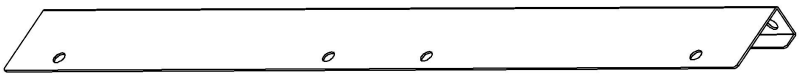

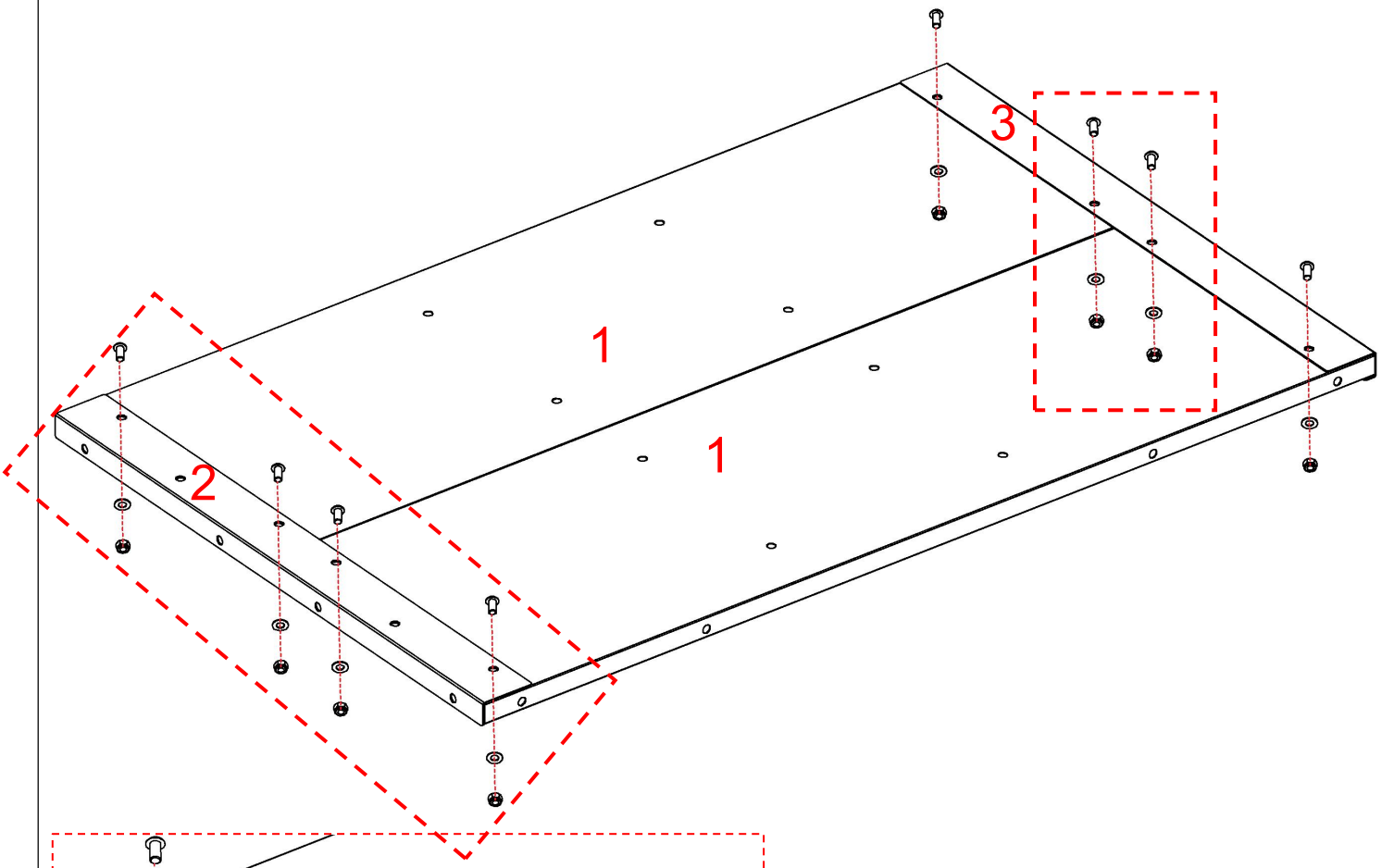

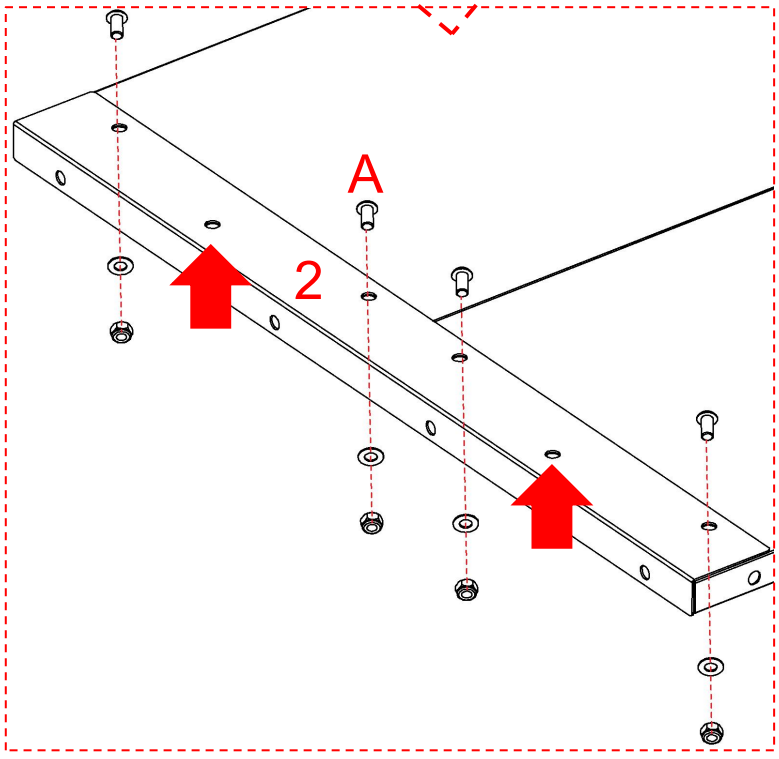

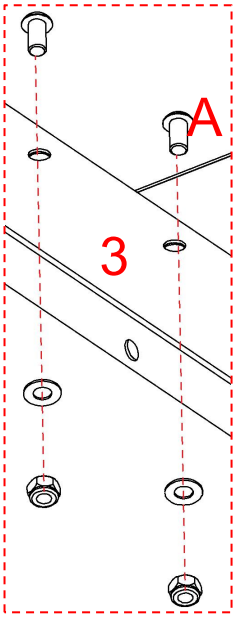

1. Flip the base plate(1) to the other side and then install it.
2. Install angle iron(2;3) at both ends respectively, and fasten them with screws(A).

Caution: Do not screw the two mounting holes marked by the arrow on angle iron(2) for the time being; they are reserved for use in subsequent installation steps.

Step 3

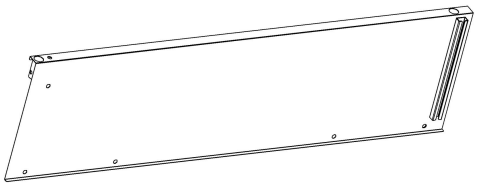

4 x1

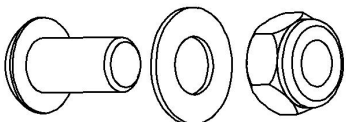

A x3

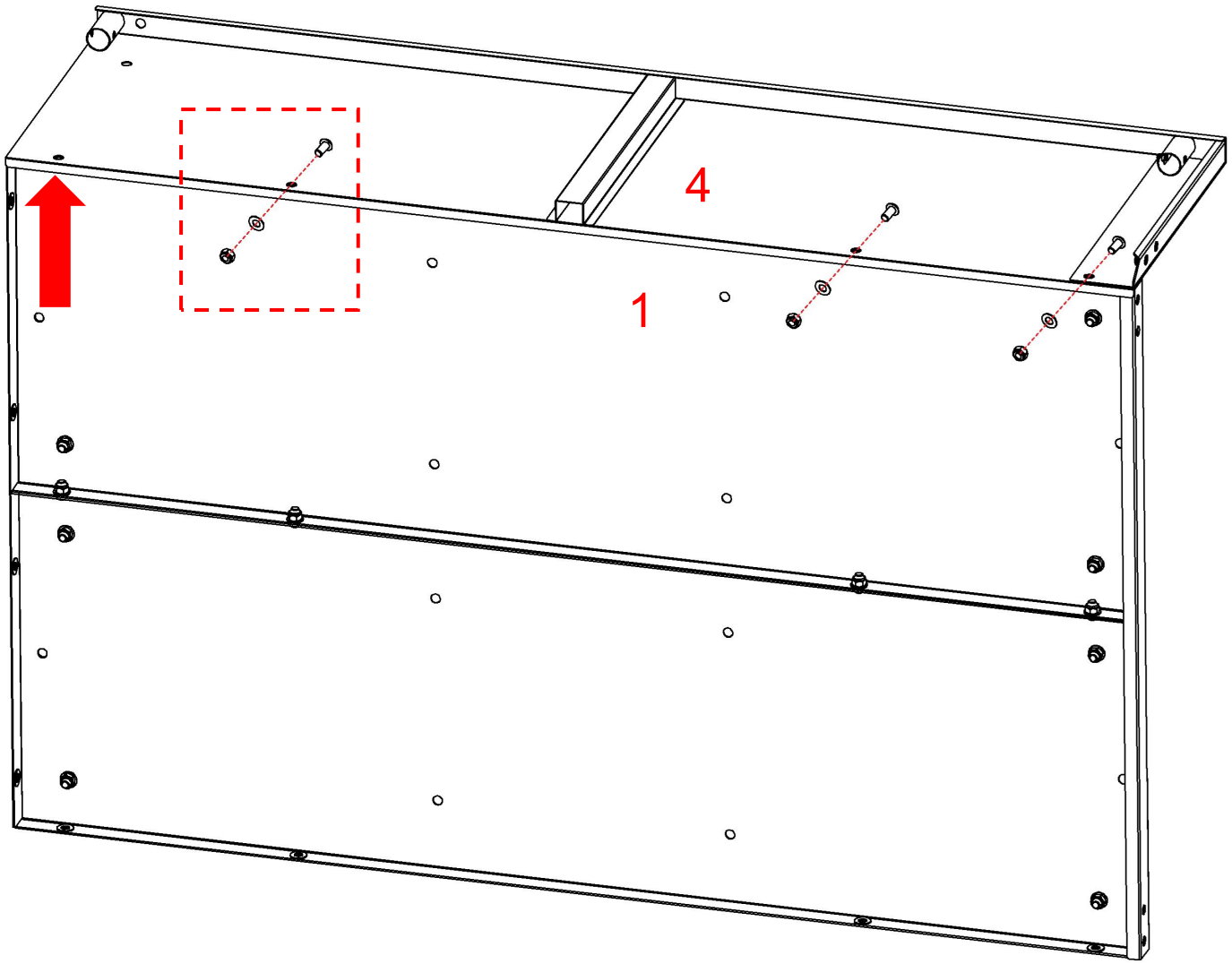

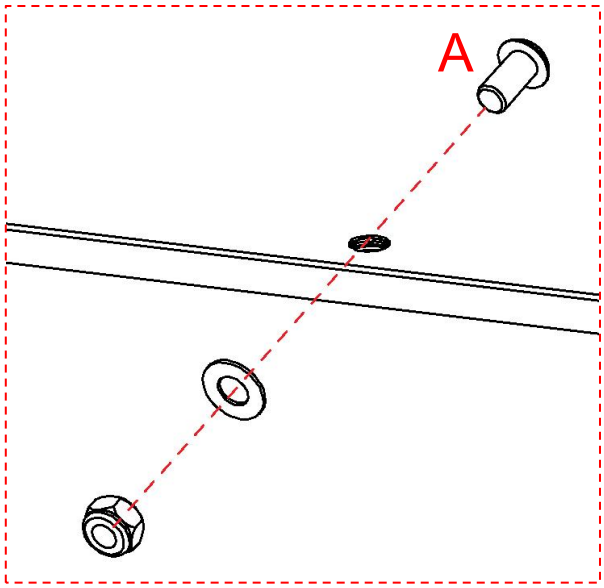

Align the side panel(4) with the base plate(1) and secure them with screws(A).

Caution: Do not install screws in the 1 marked hole (indicated by the arrow on the side panel). This hole is reserved for a subsequent assembly step.

Step 4

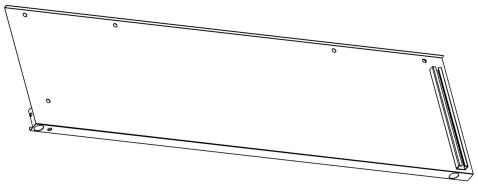

5 x1

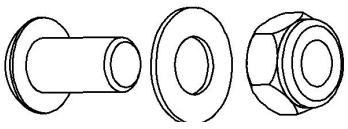

A x3

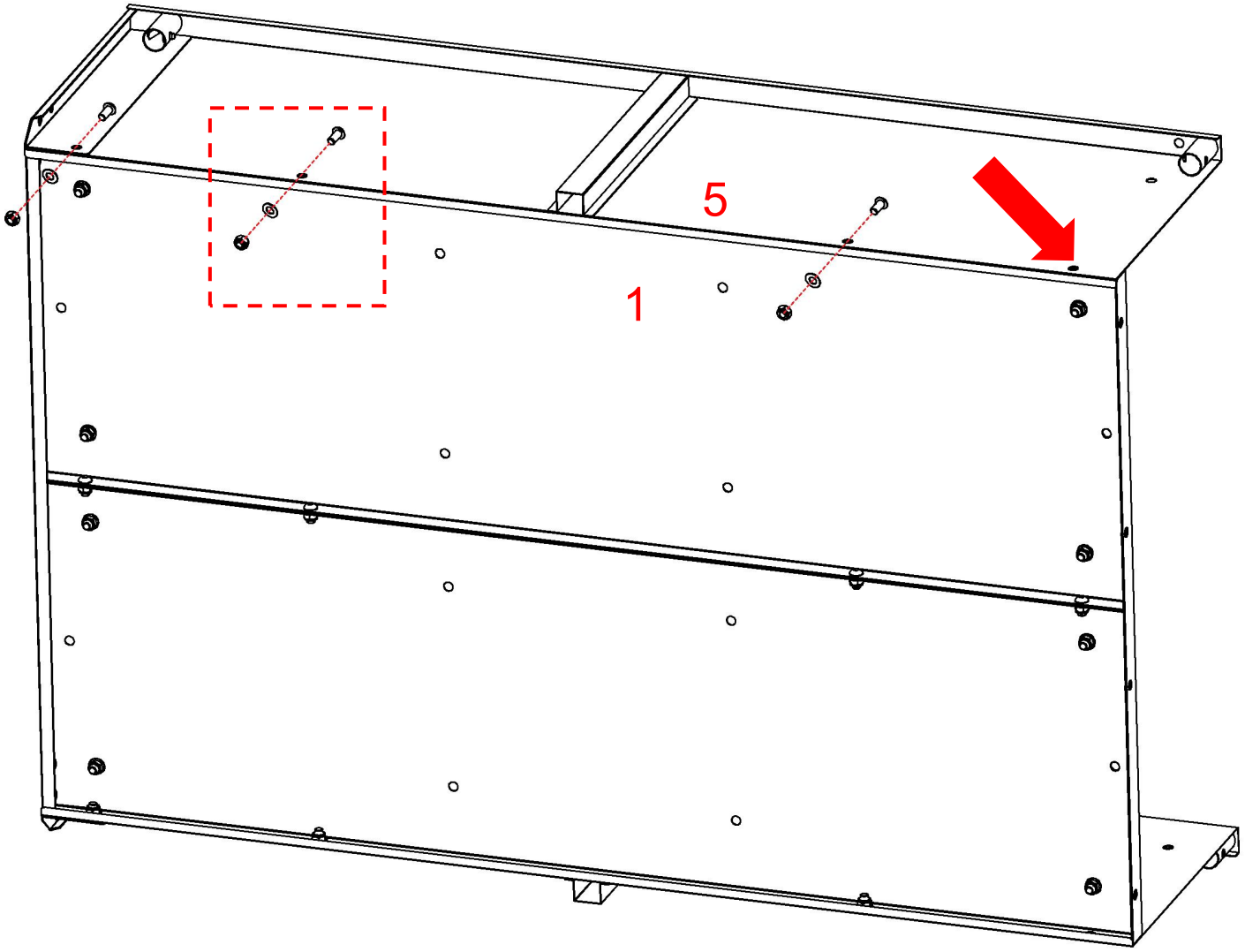

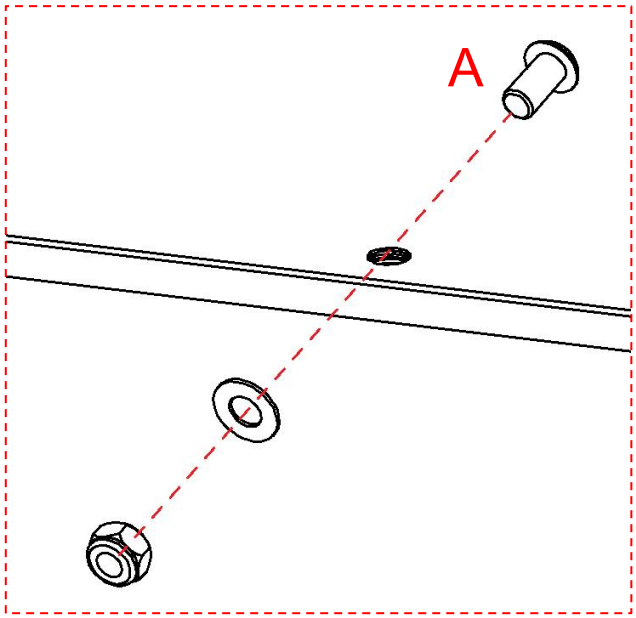

Align the side panel(5) with the base plate(1) and secure them with screws(A).

Caution: Do not install screws in the 1 marked hole (indicated by the arrow on the side panel). This hole is reserved for a subsequent assembly step.

Step 5

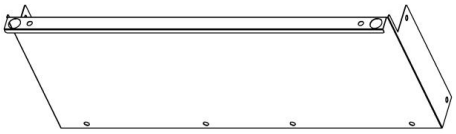

6 x1

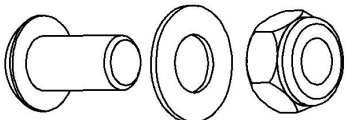

A x8

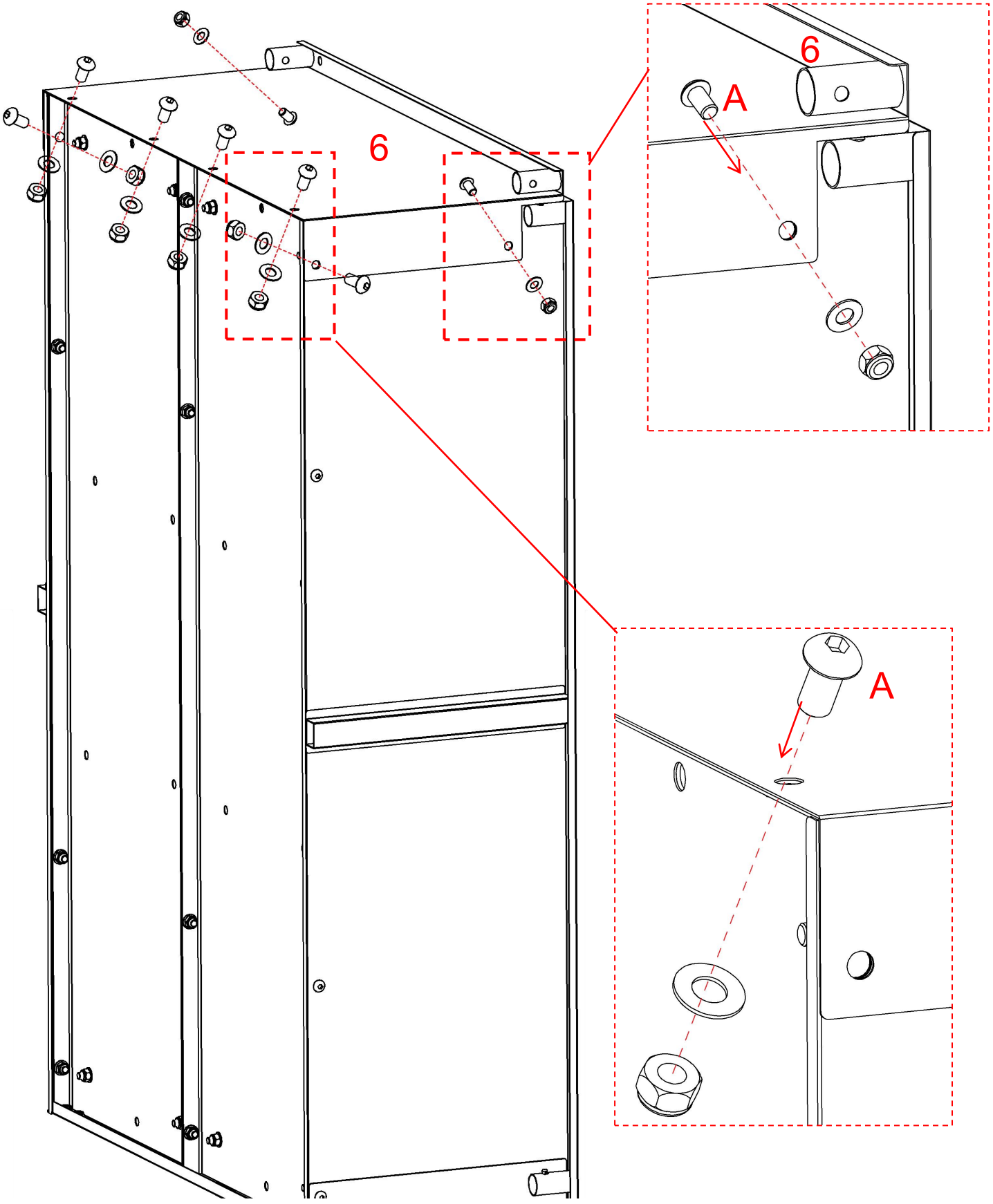

Align the front panel(6) with the side panels and the base plate, then secure them with screws(A).
Caution: Pay attention to the installation direction of the screws.

Step 6

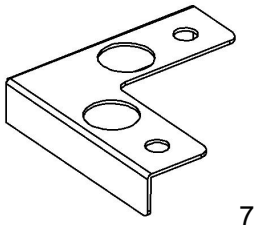

7 x2

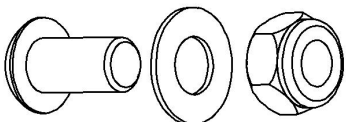

A x4

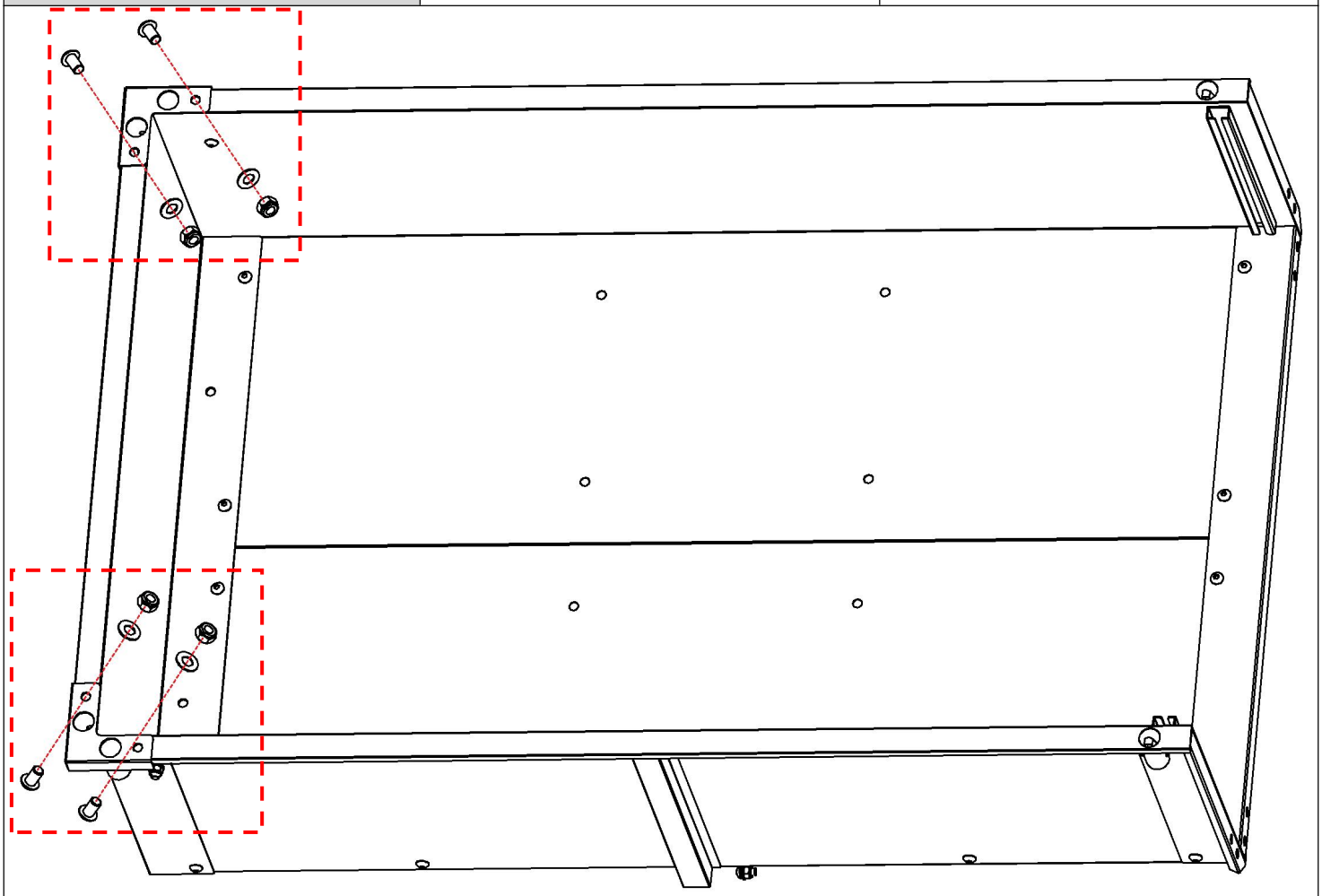

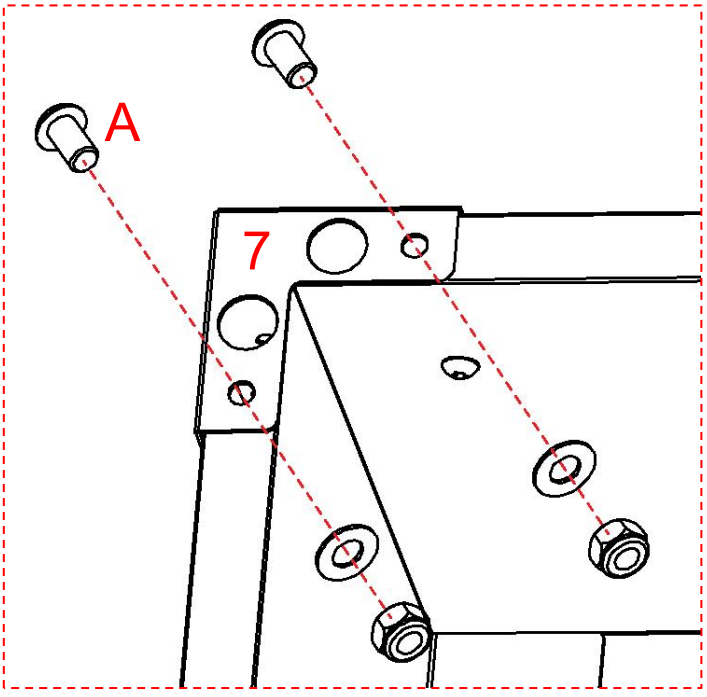

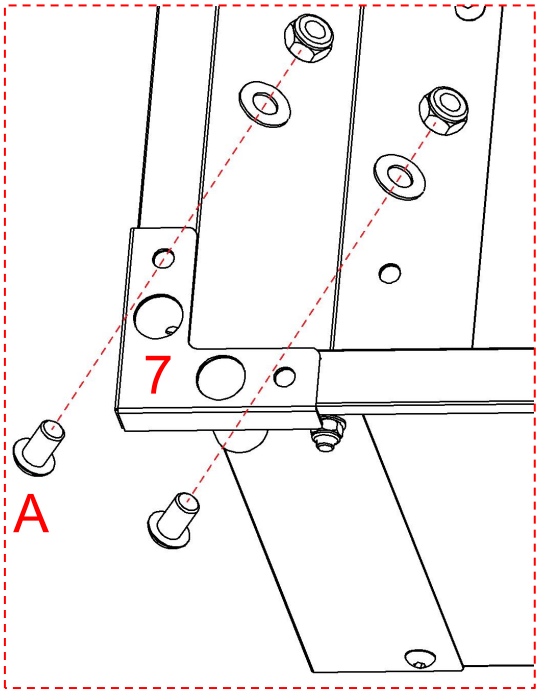

Install the iron sheet(7) on the front panel and side panels, and fasten it with screws(A).

Step 7

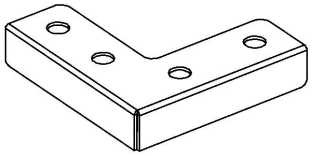

8 x1

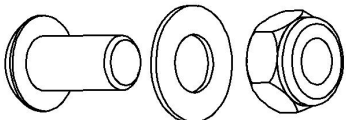

A x8

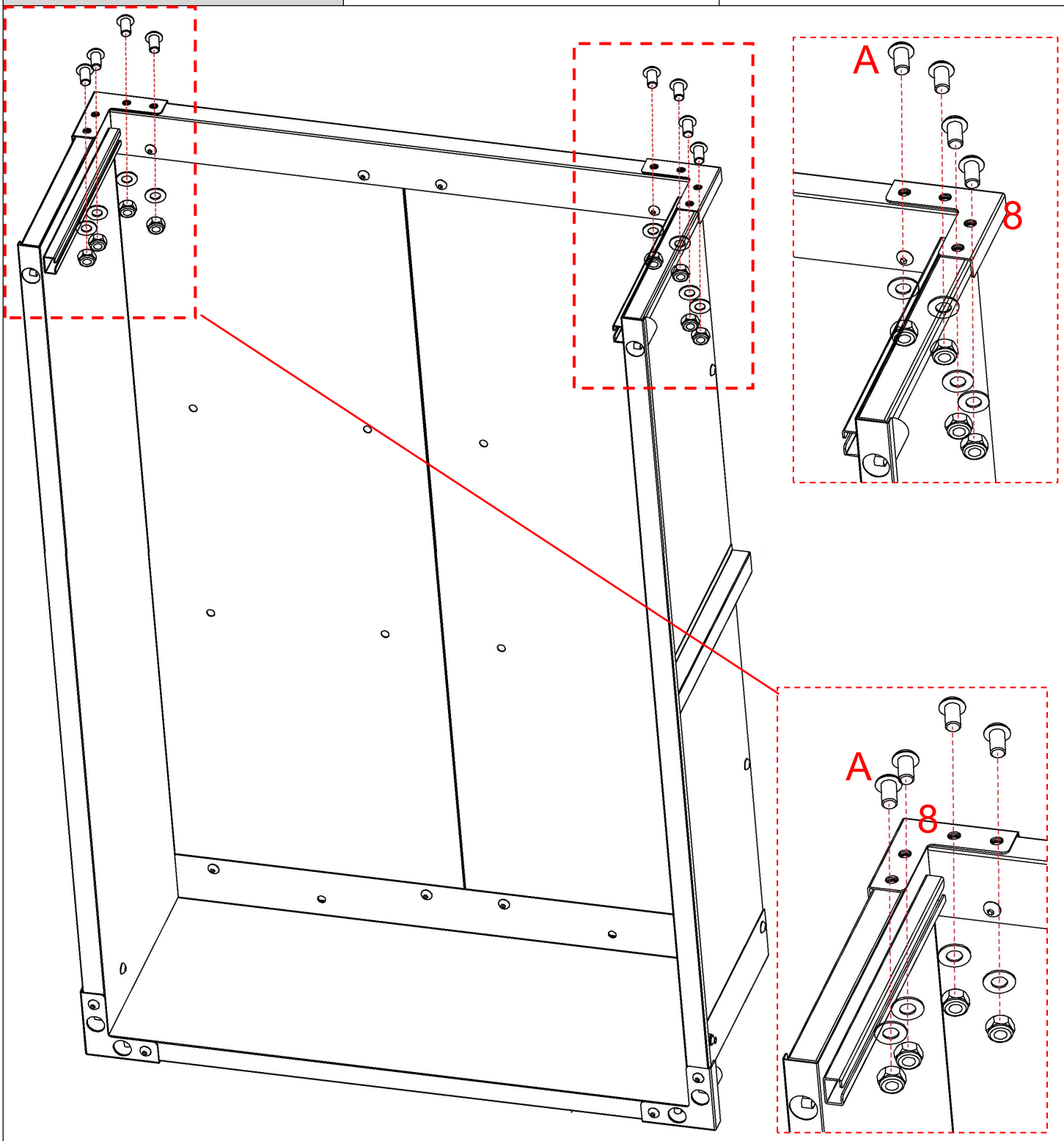

Install the iron sheet(8) on the front panel and side panels, and fasten it with screws(A).

Step 8

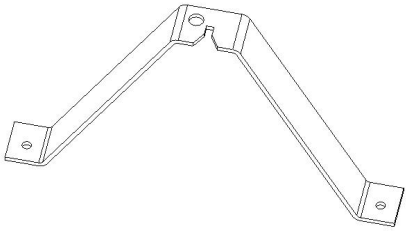

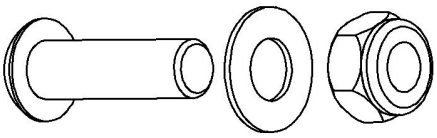

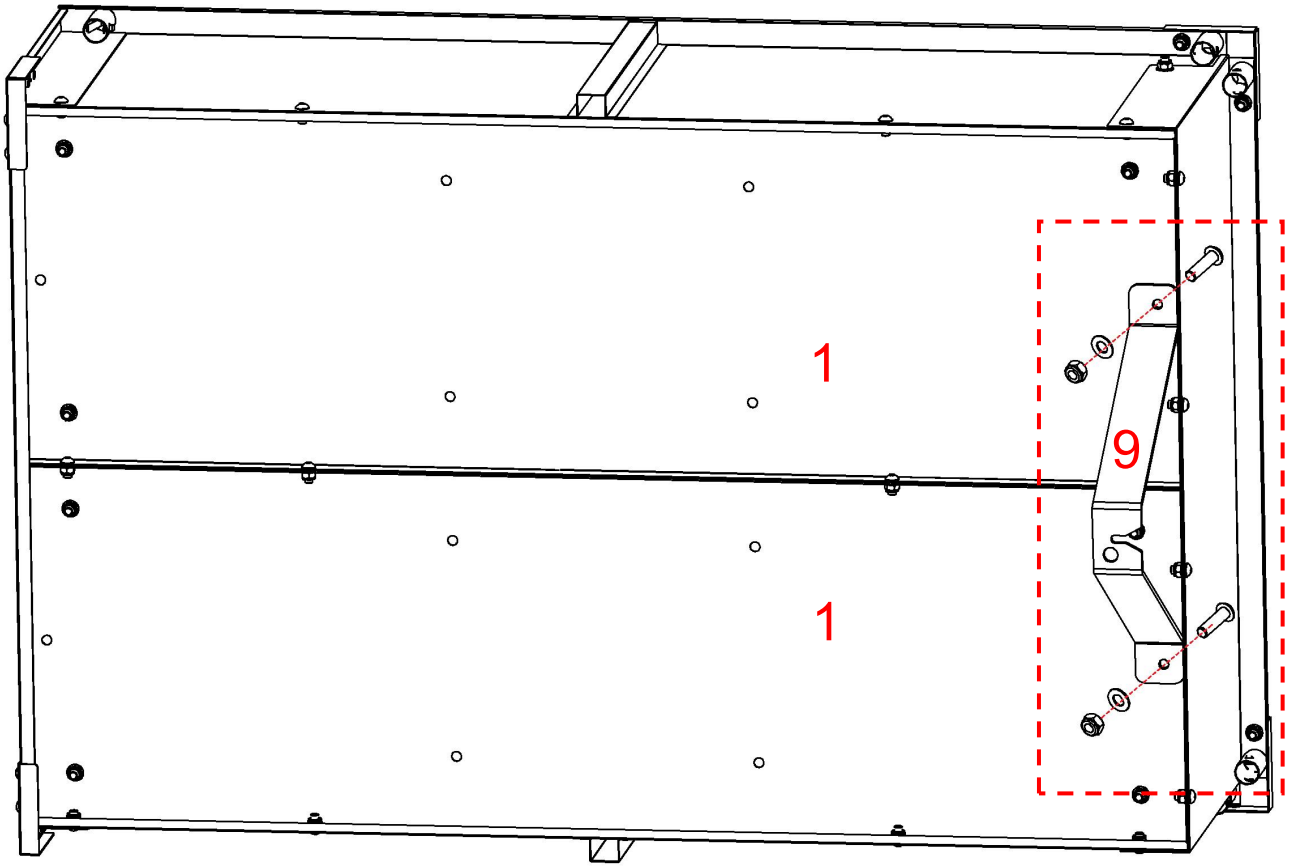

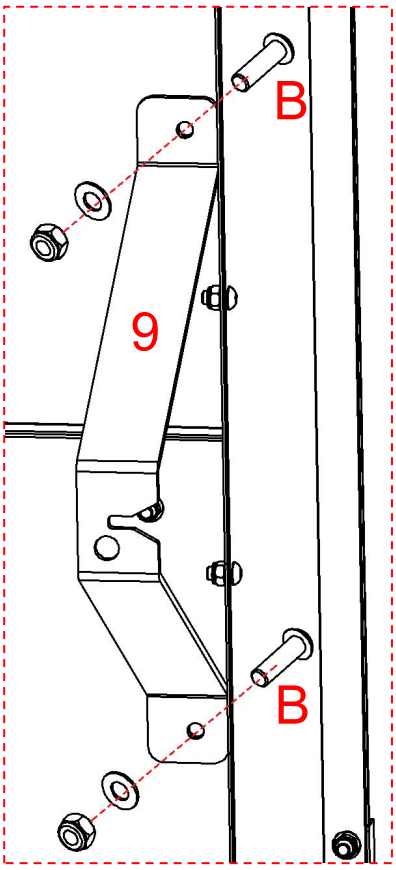

Install the V-shaped bracket(9) onto the base plate and fasten it with the corresponding screws (B) (these screws are relatively long).

Step 9

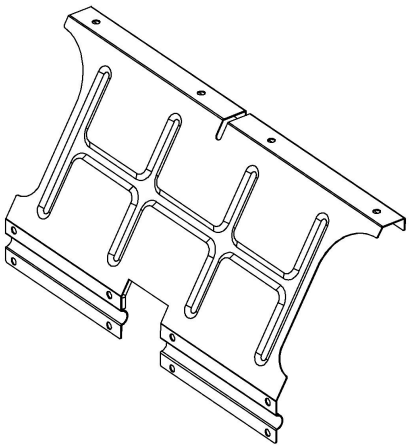

10 x2

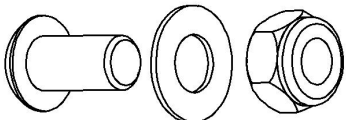

A x8

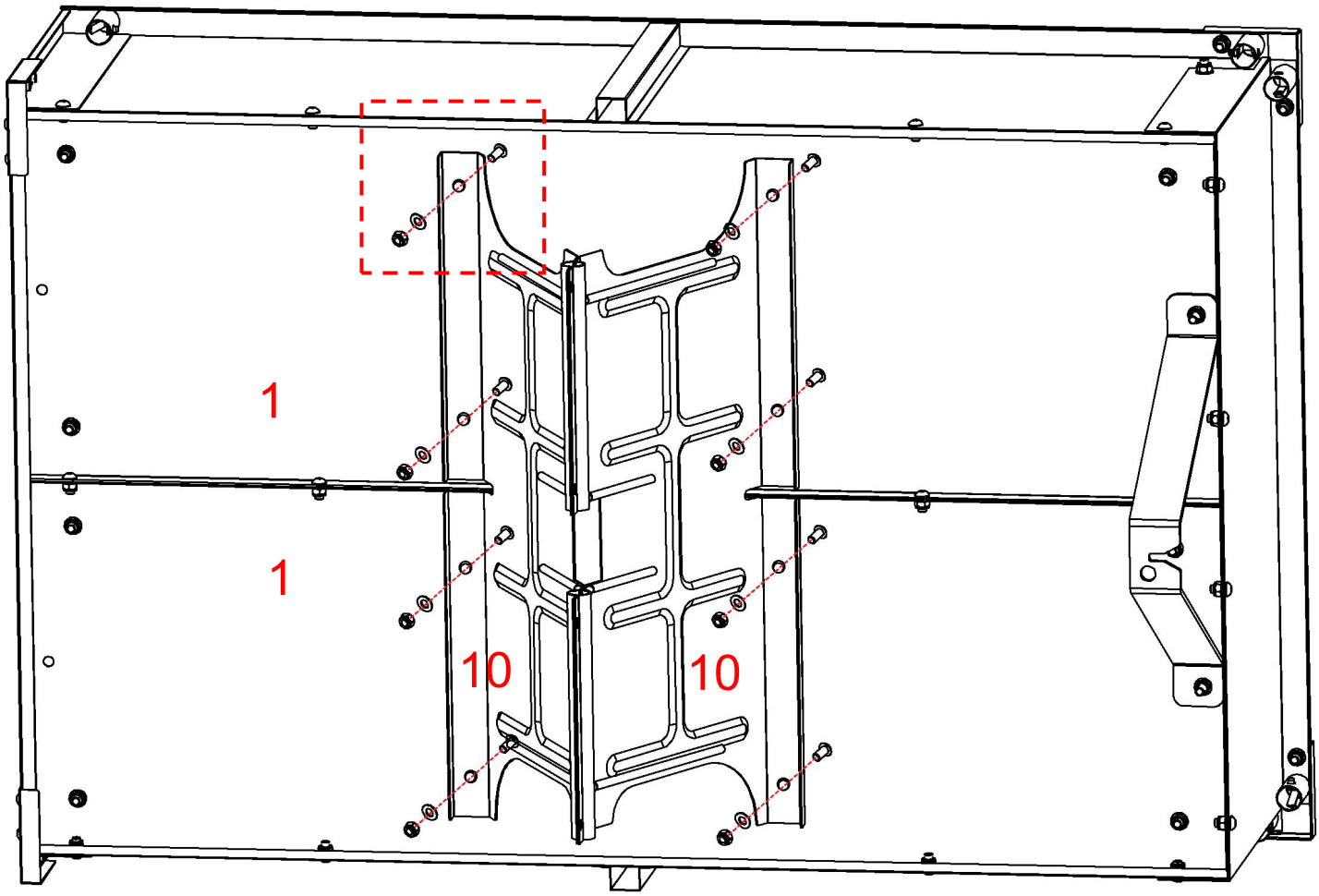

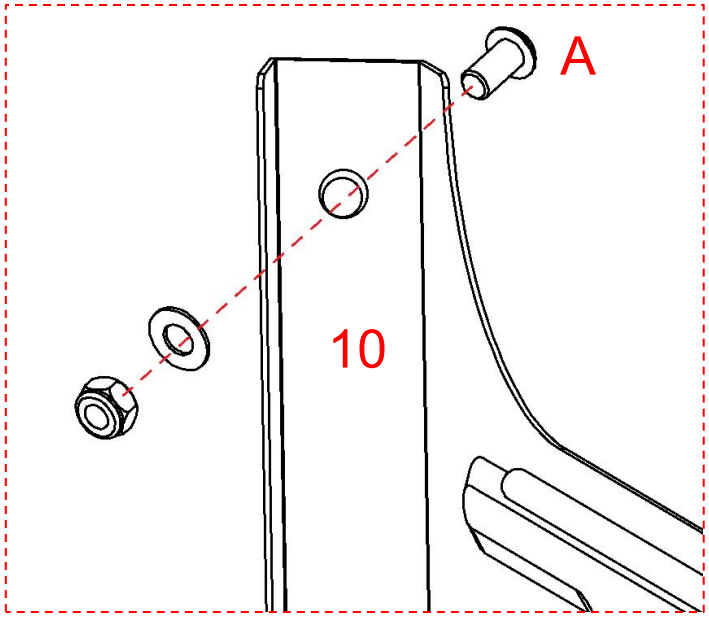

Place the iron plate(10) in the direction shown in the diagram, align it at the middle position, and then fix it to the base plate with screws(A).

Caution: Do not tighten the screws here for the time being; they are reserved to be fully tightened in subsequent steps.

Step 10

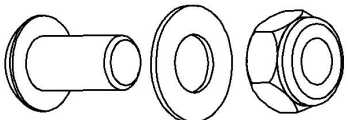

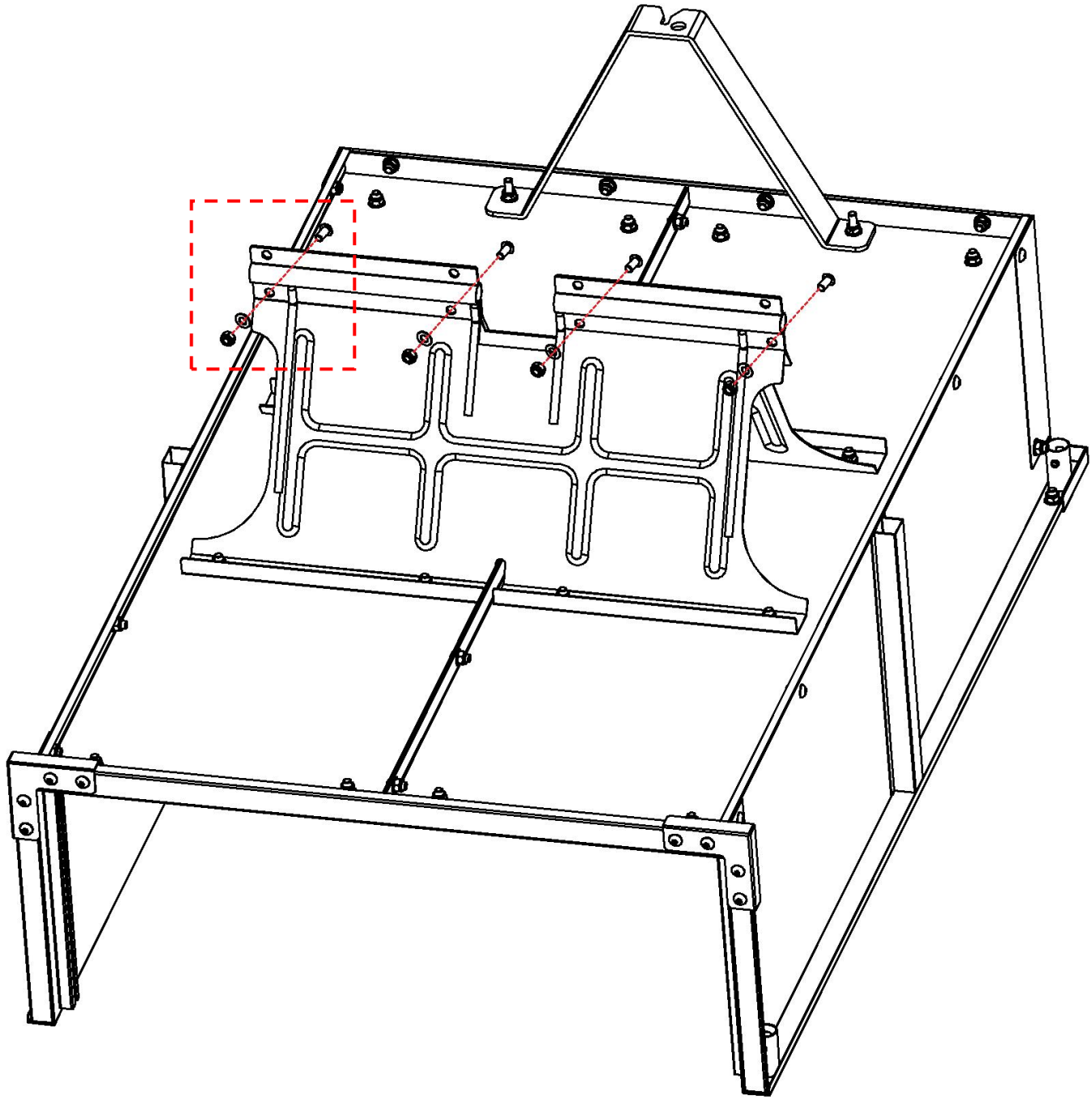

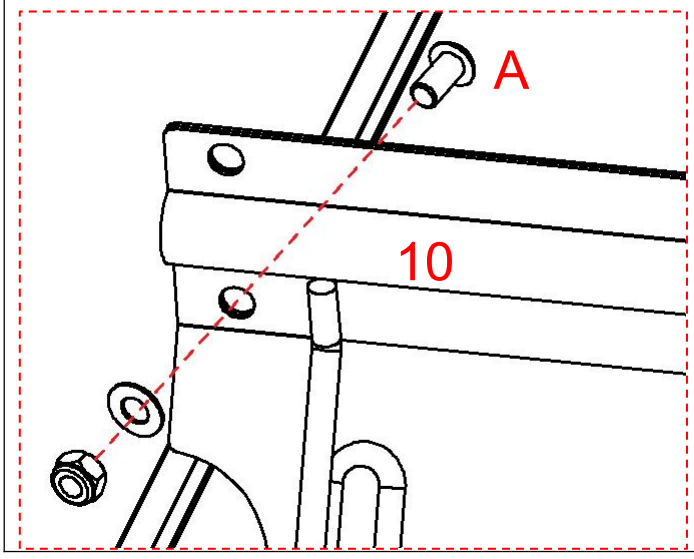

1. Securely connect the two iron plates(10) with screws(A).

2. Caution:There are a total of 8 screw holes here. At this stage, only the 4 lower ones need to be tightened, and the remaining holes are reserved for tightening in subsequent steps.

3.Caution: Do not tighten the screws here for the time being; they are reserved to be fully tightened in subsequent steps.

Step 11

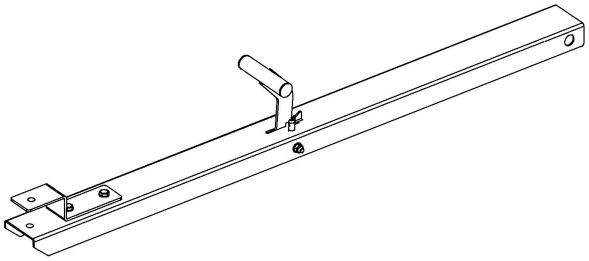

12 x1



11 x1

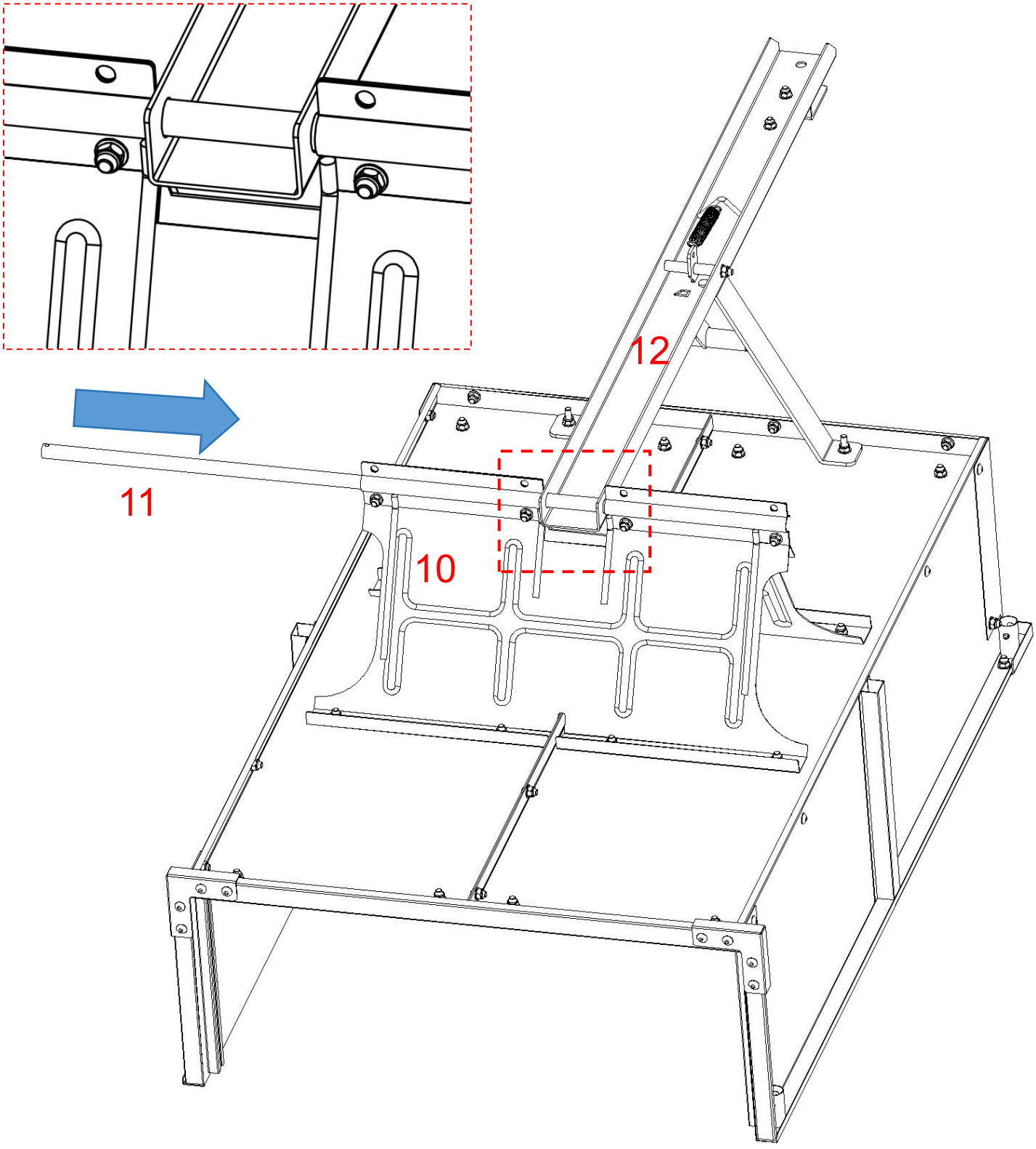

Pass the iron shaft(11) through the slot between the iron plates(10) and insert it into the traction rod(12) at the middle position.

Caution: The traction rod must be installed in the direction shown in the diagram.

Step 12

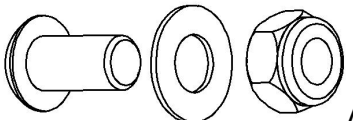

A x4

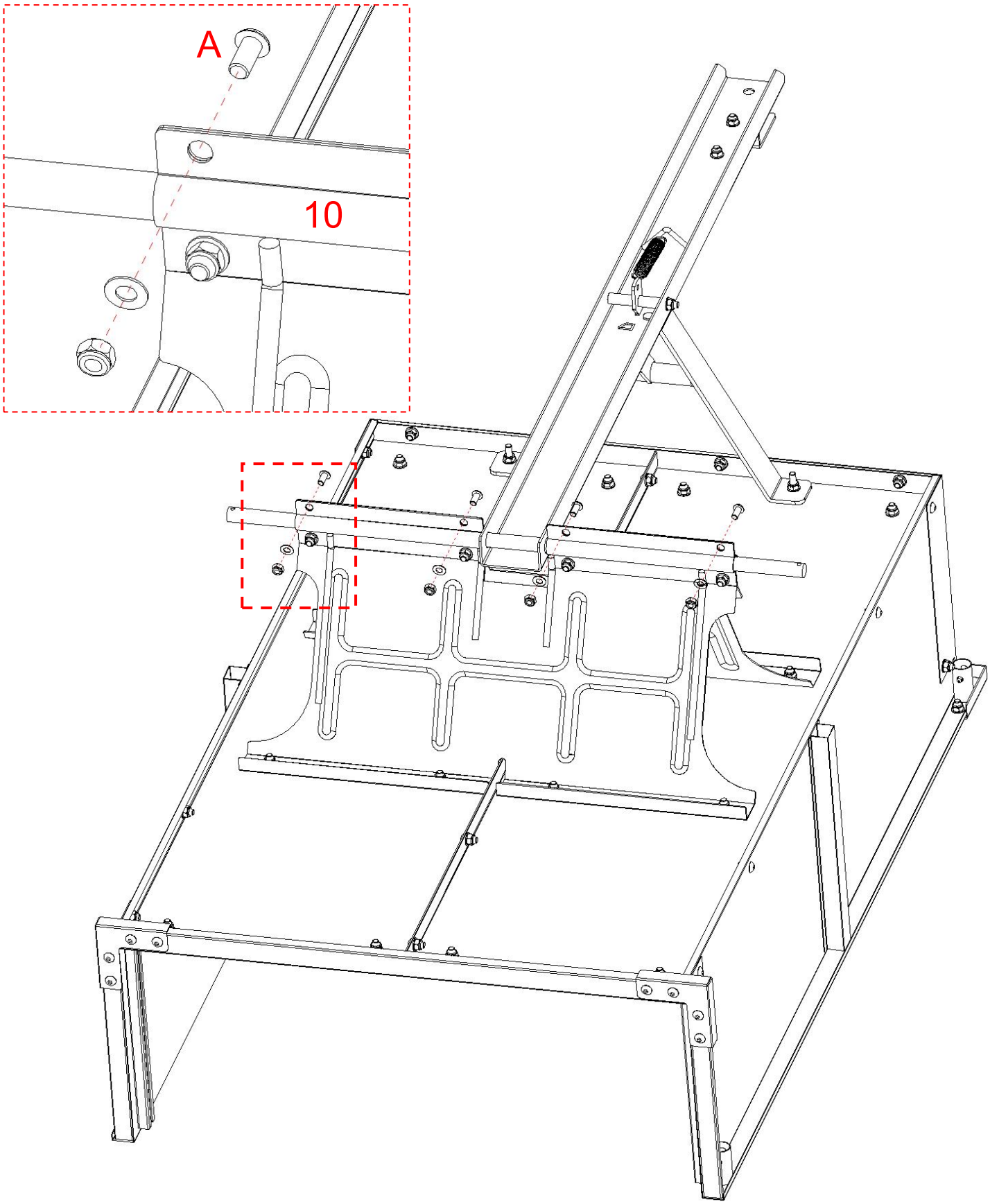

When fixing and connecting the two iron plate(10)s, fasten the remaining 4 screw holes with screws(A).

Caution: Do not tighten the screws here for the time being; they are reserved to be fully tightened in subsequent steps.

Step 13

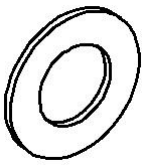

C x4

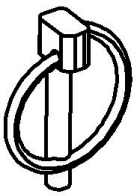

D x2

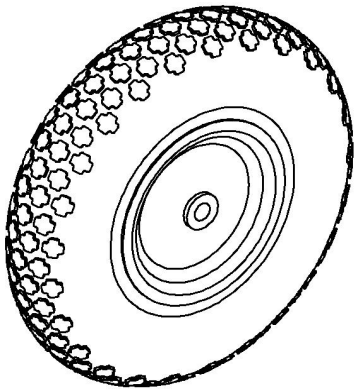

13 x2

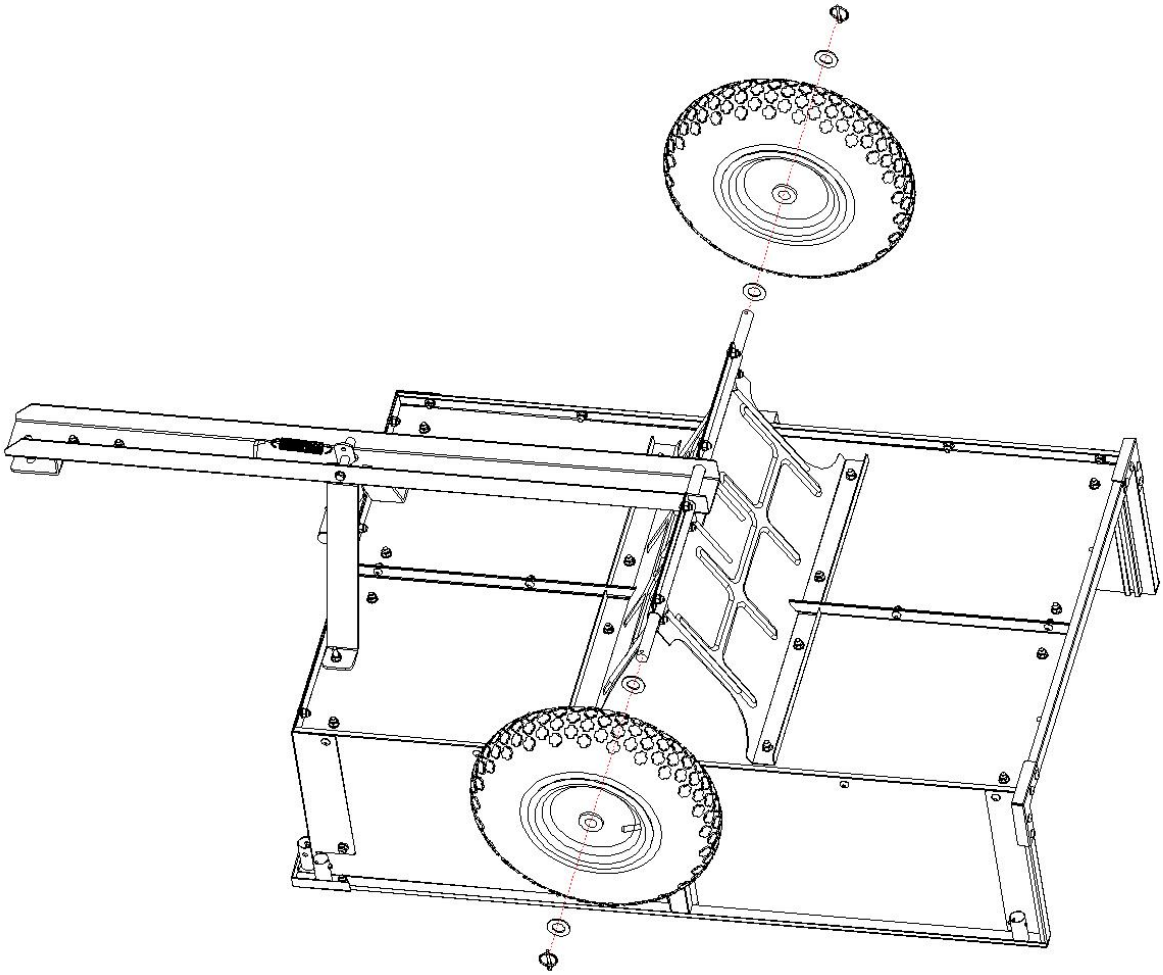

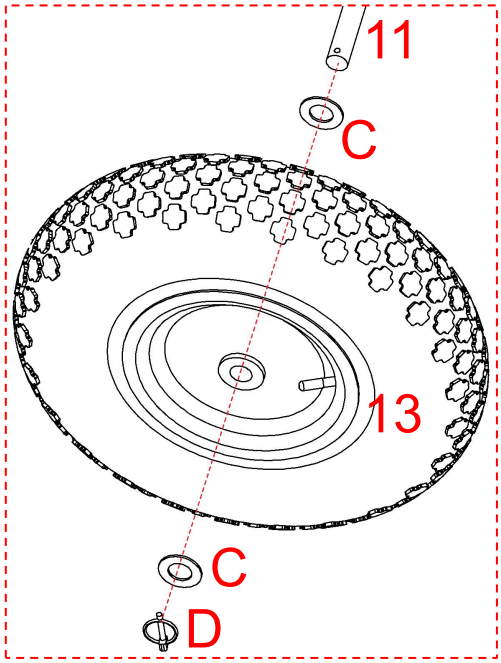

Please install the components on the axle(11) in the following order: first, fit the washer(C); next, mount the wheel(13); then, fit another washer(C); and finally, insert the O-pin(D) to secure them.

Step 14

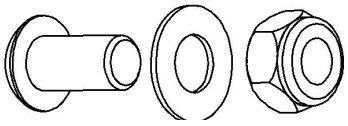

A x4

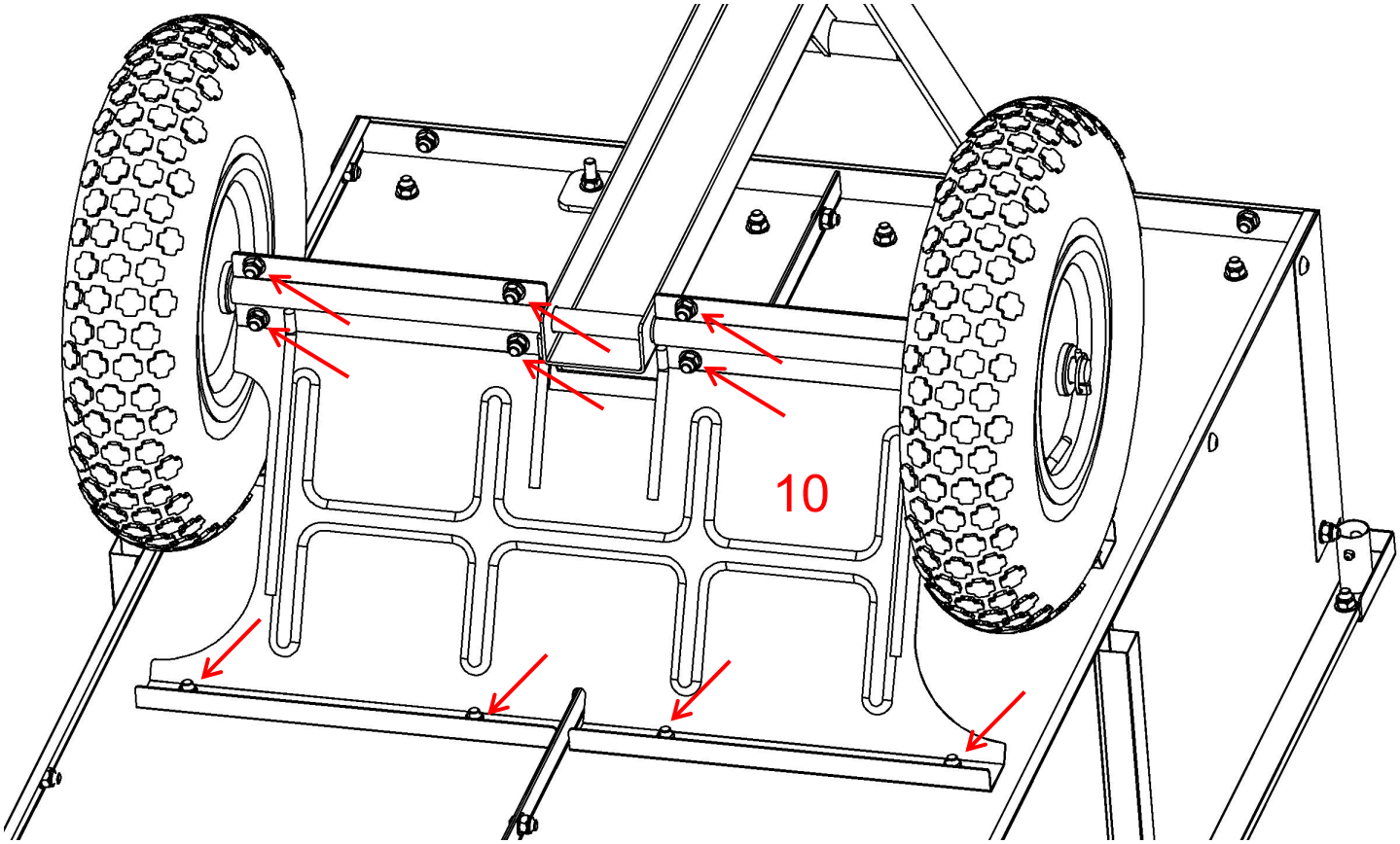

Please fully tighten all 16 screws that secure the iron plate(10).

Step 15

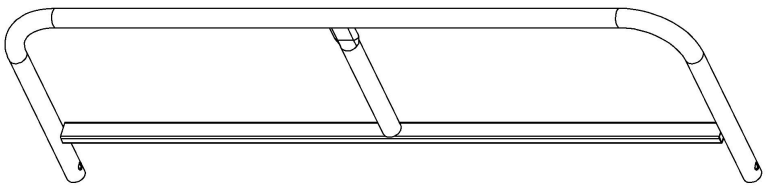

15 x1

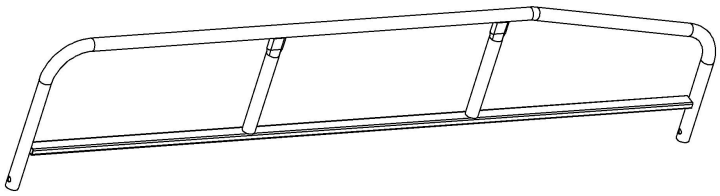

14 x2

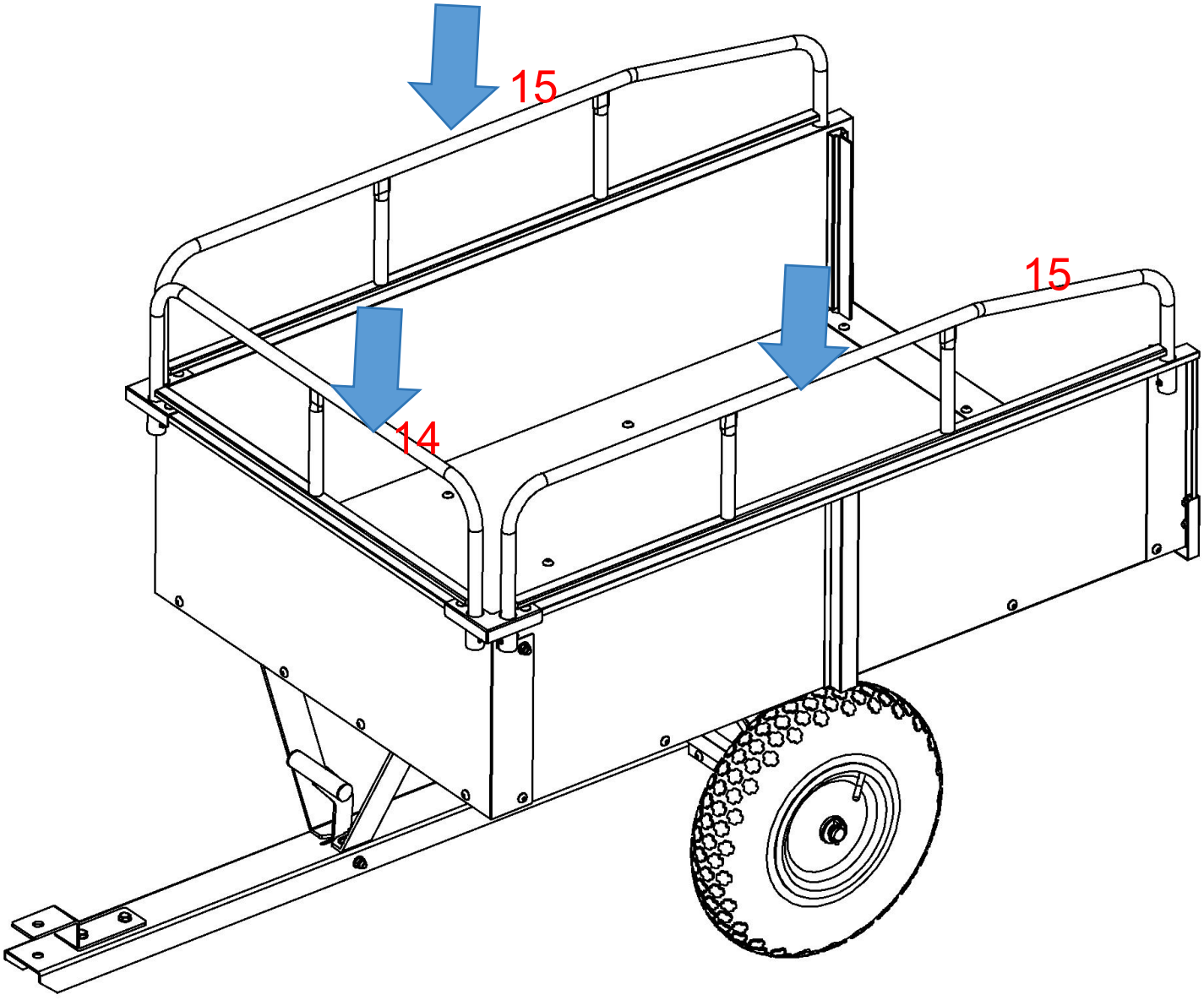

Please accurately insert the guardrail(14;15) into the mounting hole on the side.

Step 16

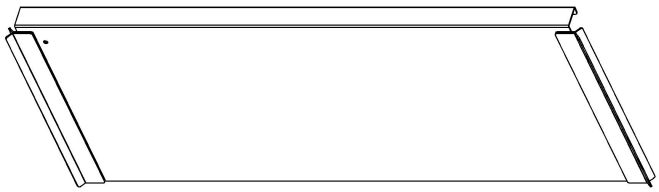

16 x1

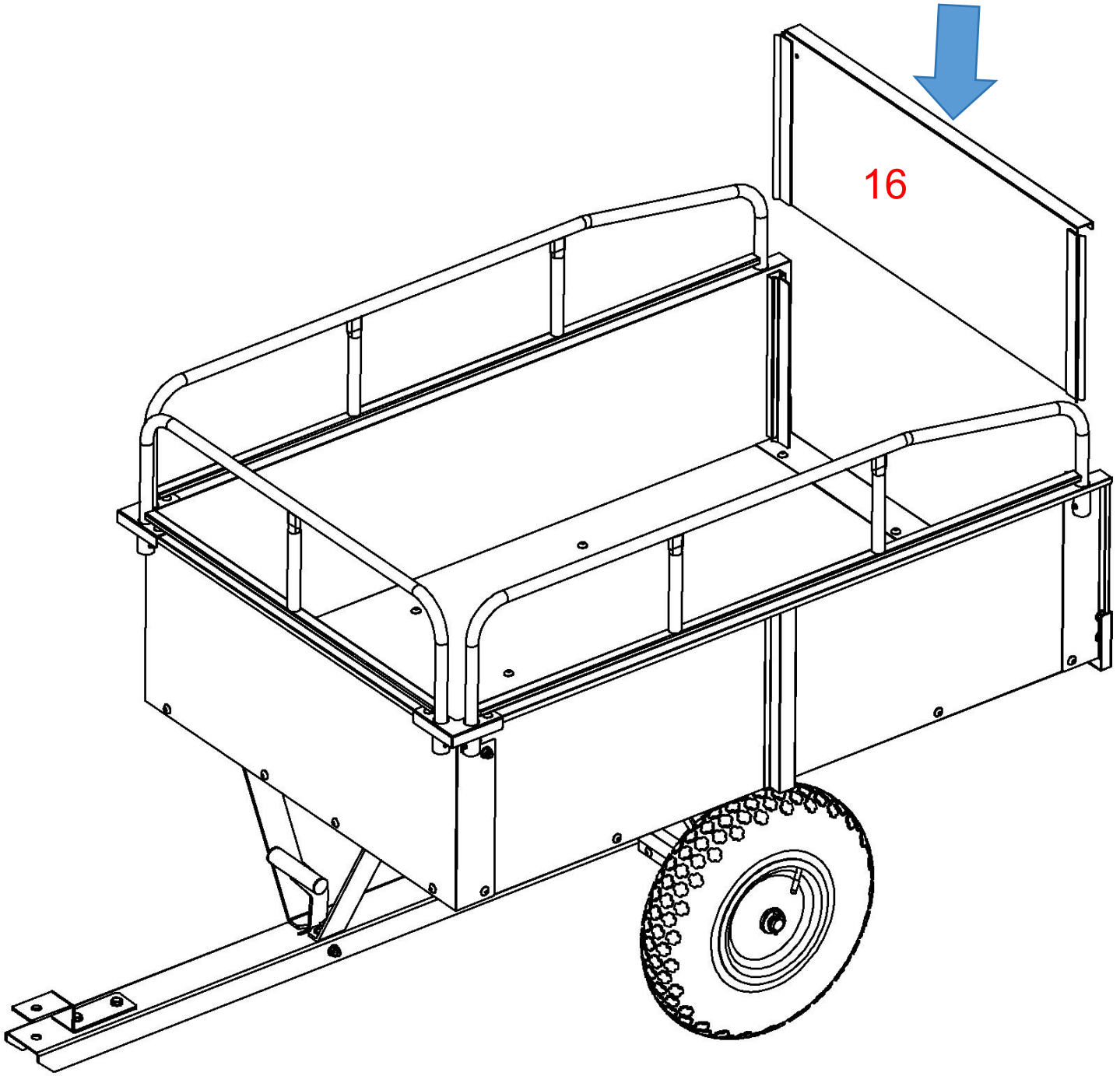

Please accurately insert the tail plate(16) into the mounting slot on the side.

Step 17



E x1



F x1

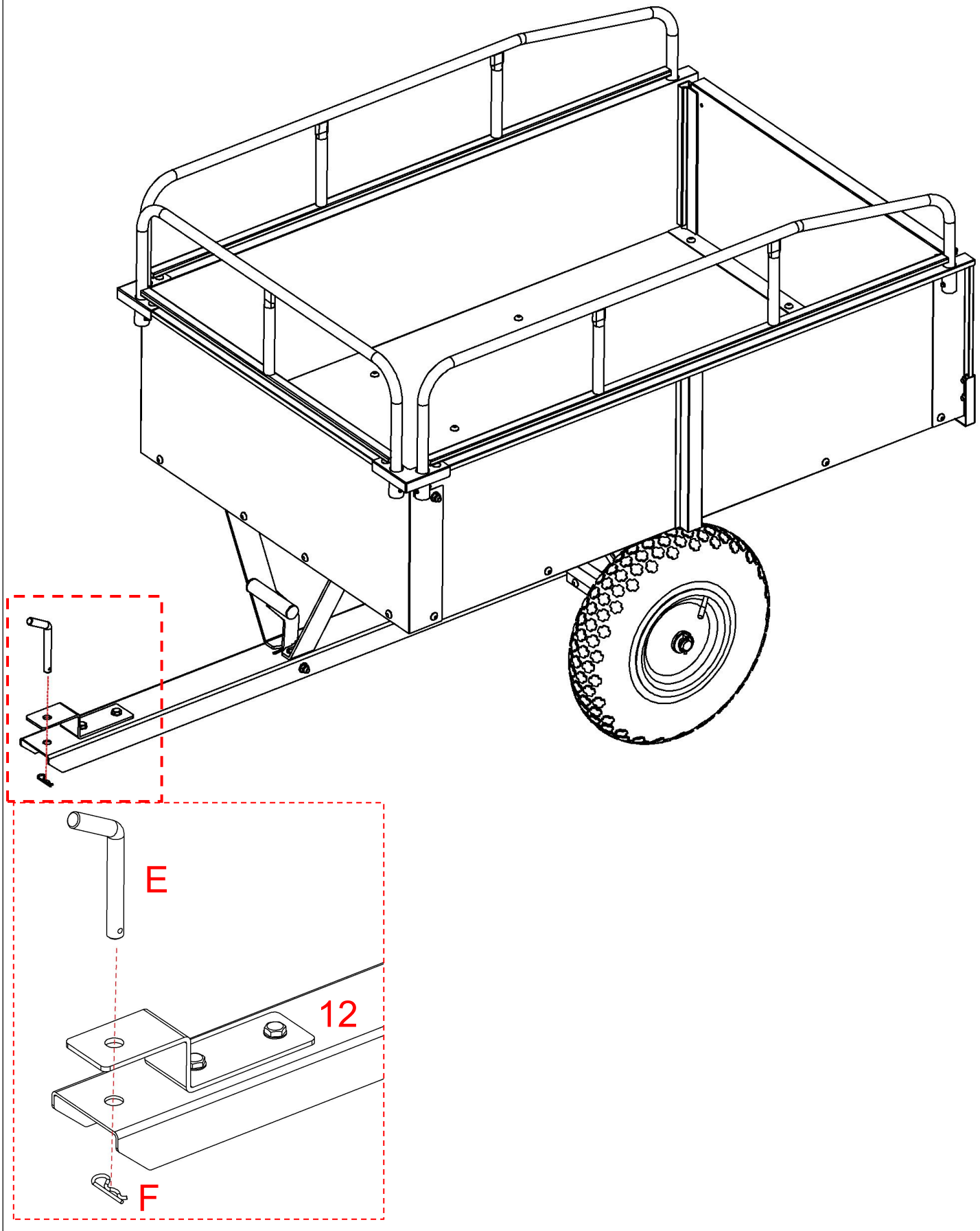

Please insert the bolt(E) into the hole of the drawbar(12) and secure it with an R-pin(F).

Caution: The function of this bolt and R-pin is to connect the trailer to the towing vehicle.

Step 18



F x1

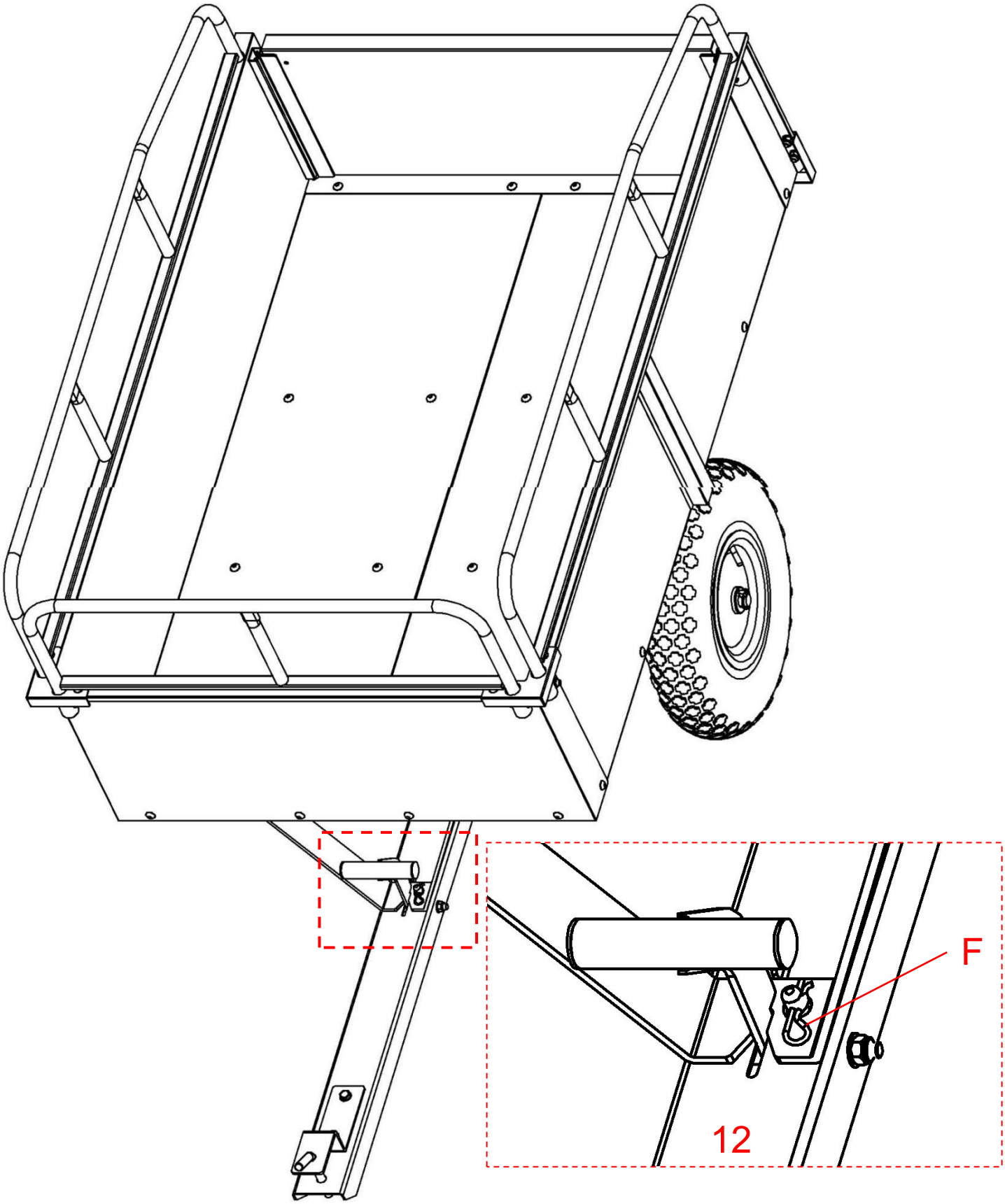

Insert the R-pin(F) into the corresponding hole of the drawbar(12).

Caution: he core function of this R-pin is to firmly lock the opening-closing device during the trailer towing phase, preventing the opening-closing device from accidentally popping open due to road bumps, vibrations, etc. during transportation, thereby ensuring the safety and stability of the towing and transportation process.

PRODUCT PARAMETER

Model	**BTC002C**
Volume	**12ft³ ~ 15ft³**
Carriage size	**1170*760*500mm**
Maximum loading capacity	**750LBS**

