VEVOR

Upgrade · The Home Creator Way

LIVESTOCK FEEDER

Model: T1098

VEVOR Support Center

T1098

VEVOR
Upgrade·The Home Creator Way

LIVESTOCK FEEDER

MODEL： T1098

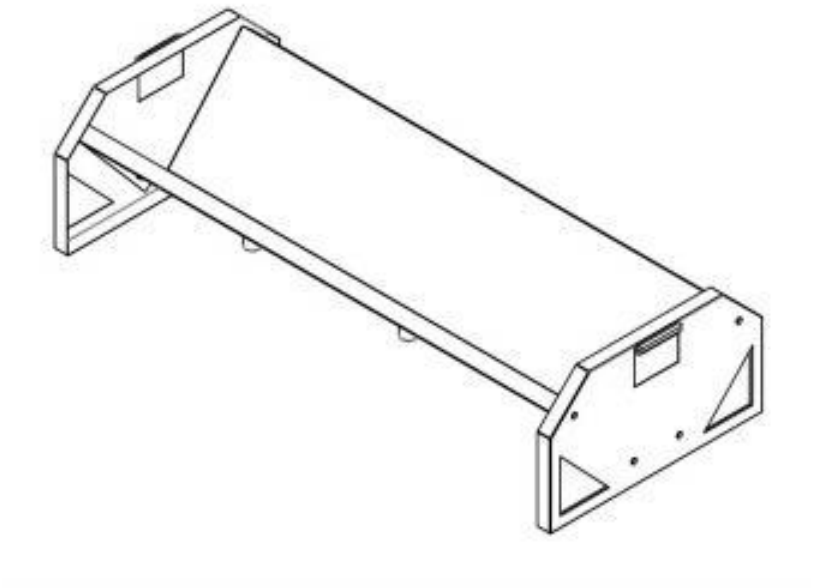

This is the original instruction, please read all manual instructions carefully before operating. VEVOR reserves a clear interpretation of our user manual. The appearance of the product shall be subject to the product you received. Please forgive us that we won't inform you again if there are any technology or software updates on our product.

WARNING

⚠ Warning-To reduce the risk of injury, user must read instructions manual carefully.

⚠ The product complies with relevant standards and regulations. Installation of this device must comply with all applicable regulations, and it should only be operated in well-ventilated areas. Please read the user manual before installing and using this equipment.



Safety precautions

Read this instructions before using this product. Failure to do so can result in serious injury. the basic precautions should always be followed,including the following:

1. PLEASE NOTE! Drawings in this manual are for illustration purposes only and in some details may differ from the actual product.

2. User Guide

Do not exceed the load weight. The screw is fixed on a flat, hard, wall surface for safe use

Check the livestock feeder before each use. Do not use it if parts are loose or damaged.

⚠ Before Assembling

Before assembling, we recommend:

1. Wear Gloves.

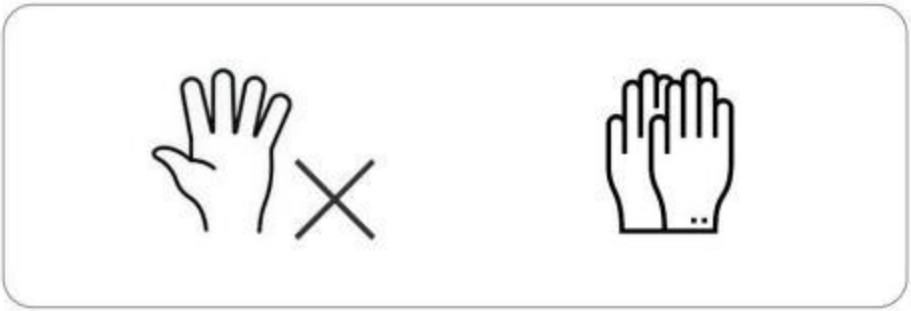

PARTS LIST

1 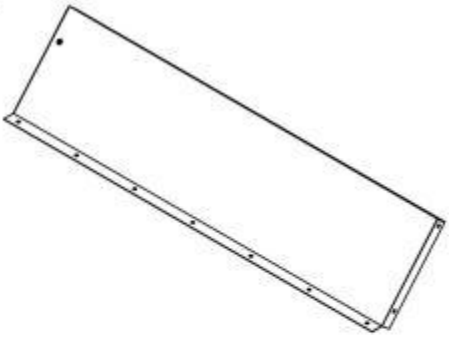 2pcs	2 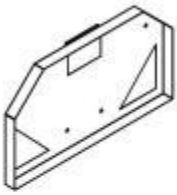 2pcs			
3  3pcs	4  M6*12mm（12） Bolt+Lock Washer+Nut	5  M6*40mm（3） Bolt+Washer+Nut	6  Spanner（1）	7  Wrench（1）

INSTALLATION

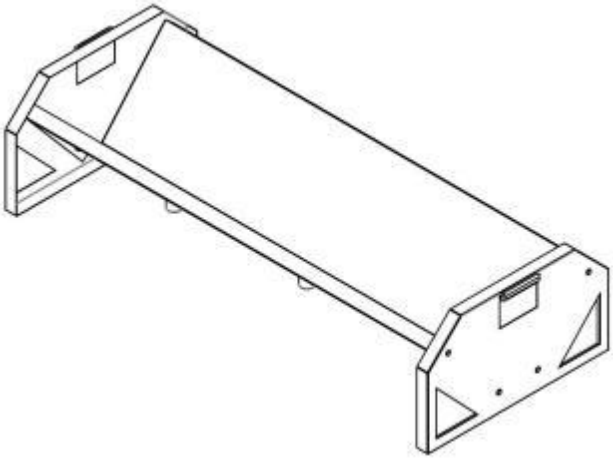

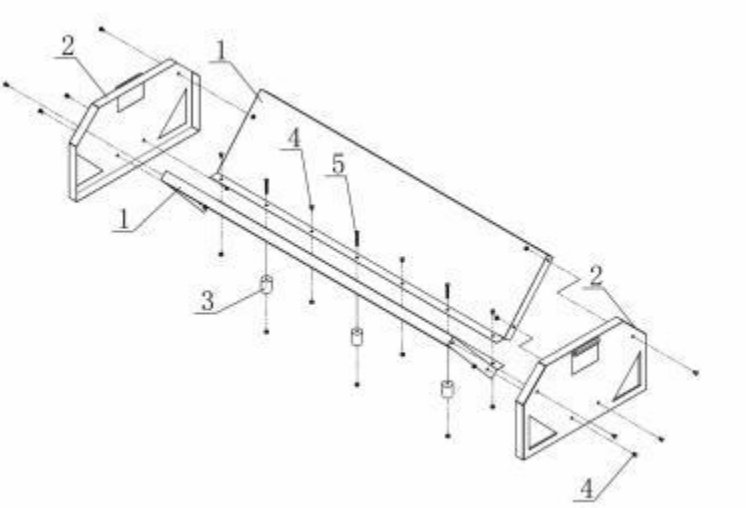

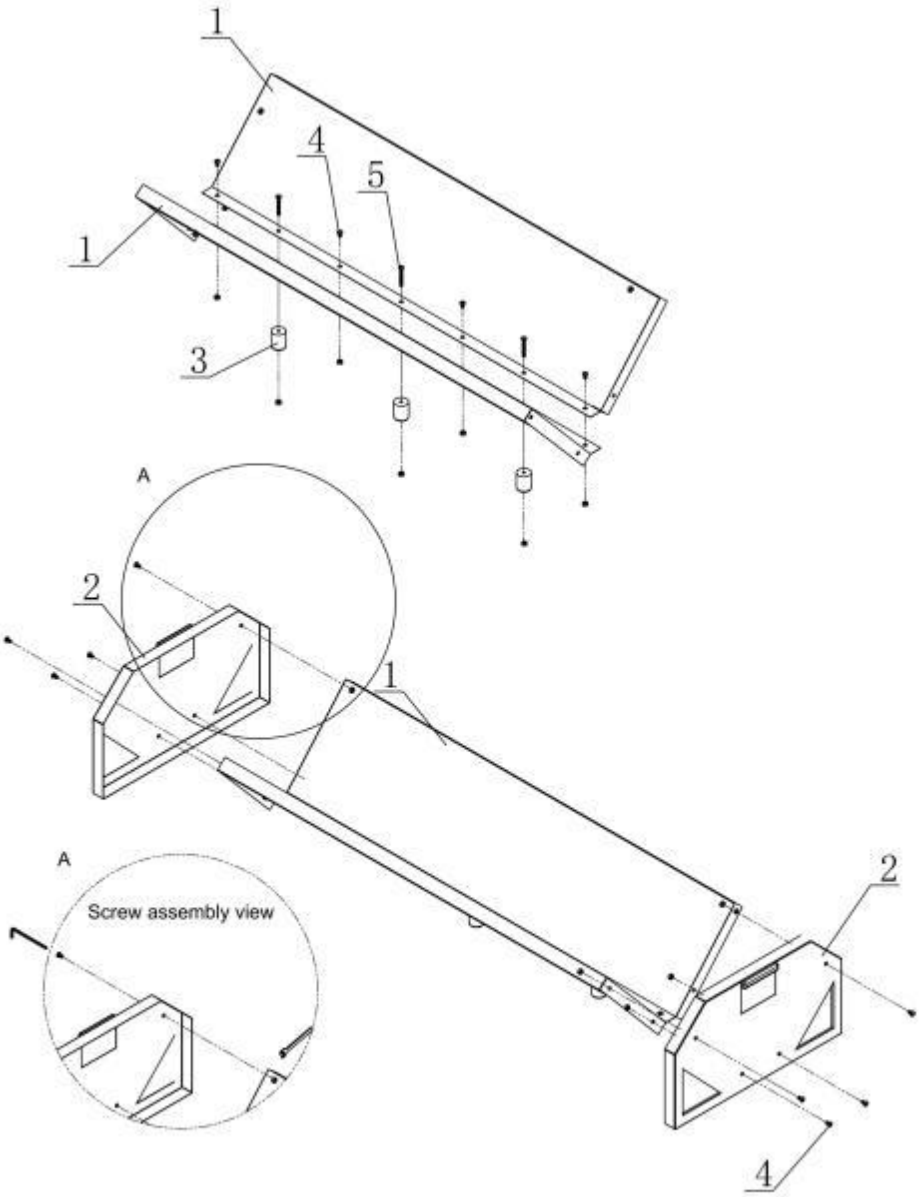
1
4
5
1
3
A
2
1
A
Screw assembly view
2
4

