VEVOR

Upgrade · The Home Creator Way

Z1Z-CF-9180 (EU)

Z1Z-CF-9180 (UK)

VEVOR Support Center

CORE DRILL

Model: Z1Z-CF-9180

VEVOR | Upgrade
The Home Creator Way

MODEL:Z1Z-CF-9180



NOTE: The appearance color is subject to your purchase.

This is the original instruction, please read all manual instructions carefully before operating. VEVOR reserves a clear interpretation of our user manual. The appearance of the product shall be subject to the product you received. Please forgive us that we won't inform you again if there are any technology or software updates on our product.



DESCRIPTION OF THE SYMBOLS

The symbols used in this manual are intended to alert you of the possible risks. Please fully read the safety signs and instructions below. The warnings themselves do not prevent the risks and can not be a substitute for proper methods of avoiding accidents.



This symbol, placed before a safety comment, indicates a kind of precaution, warning, or danger. Ignoring this warning may lead to an accident. To reduce the risk of injury, fire, or electrocution, please always follow the recommendations shown below.



WARNING - To reduce the risk of injury, users must read the instruction manual carefully.
Please refer to the appropriate section in this user manual before any operation.



WARNING: Be sure to wear eye protectors, dust masks, and gloves when using this product.



This product is subject to the provision of European Directive 2012/19/EC. The symbol showing a crossed-out wheeled bin indicates that the product requires separate refuse collection in the European Union. This symbol applies to the

product and all accessories marked with this symbol. Products marked as such may not be discarded with normal domestic waste but must be taken to a collection point for recycling electrical and electronic devices.

FCC Information

CAUTION: Changes or modifications not expressly approved by the party responsible for compliance could void the user's authority to operate the equipment!

This device complies with Part 15 of the FCC Rules. Operation is subject to the following two conditions:

1) This product may cause harmful interference.

2)This product must accept any interference received, including interference that may cause undesired operation.

WARNING: Changes or modifications to this product not expressly approved by the party responsible for compliance could void the user's authority to operate the product.

Note: This product has been tested and found to comply with the limits for a Class B digital device pursuant to Part 15 of the FCC Rules. These limits are designed to provide reasonable protection against harmful interference in a residential installation.

This product generates, uses and can radiate radio frequency energy, and if not installed and used in accordance with the instructions, may cause harmful interference to radio communications. However, there is no guarantee that interference will not occur in a particular installation. If this product does cause harmful interference to radio or television reception,which can be determined by turning the product off and on, the user is encouraged to try to correct the interference by one or more of the following measures.

· Reorient or relocate the receiving antenna.

· Increase the distance between the product and receiver.

· Connect the product to an outlet on a circuit different from that to which the receiver is connected.

· Consult the dealer or an experienced radio/TV technician for assistance.

SAFETY INSTRUCTIONS

 **WARNING:** Read all safety warnings, instructions, illustrations and specifications provided with this power tool. Failure to follow all instructions listed below may result in electric shock, fire and/or serious injury.

The product complies with relevant standards and regulations. Installation of this device must comply with all applicable regulations, and it should only be operated in well-ventilated areas. Please read the user manual before installing and using this equipment.

Save all warnings and instructions for future reference.



General Power Tool Safety Warnings - Work area safety

a) Keep work area clean and well lit. Cluttered or dark areas invite accidents.

b) Do not operate power tools in explosive atmospheres, such as in the presence of flammable liquids, gases or dust. Power tools create sparks which may ignite the dust or fumes.

c) Keep children and bystanders away while operating a power tool. Distractions can cause you to lose control.

d) Before work to tie the cuffs, women need to wear a good woman hat, long hair hidden in the hat, is strictly prohibited to wear gloves.When the construction is completed, the switch must be turned off before leaving.

e) This appliance is not intended for use by persons (including children) with reduced physical, sensory or mental capabilities, or lack of experience and knowledge, unless they have been given supervision or instruction concerning use of the appliance by a person responsible for their safety.

f) Children shall not play with the appliance.

g) This appliance shall not be used by children. Keep the appliance and its cord out of reach of children.



General Power Tool Safety Warnings - Electrical safety

a) Power tool plugs must match the outlet. Never modify the plug in any way. Do not use any adapter plugs with earthed (grounded) power tools. Unmodified plugs and matching outlets will reduce risk of electric shock.

b) Avoid body contact with earthed or grounded surfaces, such as pipes, radiators, ranges and refrigerators. There is an increased risk of electric shock if your body is earthed or grounded.
c) Do not expose power tools to rain or wet conditions. Water entering a power tool will increase the risk of electric shock.
d) Do not abuse the cord. Never use the cord for carrying, pulling or unplugging the power tool. Keep cord away from heat, oil, sharp edges or moving parts. Damaged or entangled cords increase the risk of electric shock.
e) When operating a power tool outdoors, use an extension cord suitable for outdoor use. Use of a cord suitable for outdoor use reduces the risk of electric shock.
f) If operating a power tool in a damp location is unavoidable, use a ground fault circuit interrupter (GFCI) protected supply. Use of an GFCI reduces the risk of electric shock.
WARNING: Only use the supply unit provided with this appliance.
WARNING: Use only an external supply with the following specifications: <voltage and nature of supply> <power / current of supply>



General Power Tool Safety Warnings - Personal safety

a) Stay alert, watch what you are doing and use common sense when operating a power tool. Do not use a power tool while you are tired or under the influence of drugs, alcohol or medication. A moment of inattention while operating power tools may result in serious personal injury.
b)Use personal protective equipment. Always wear eye protection. Protective equipment such as a dust mask, non-skid safety shoes, hard hat or hearing protection used for appropriate conditions will reduce personal injuries.
c) Prevent unintentional starting. Ensure the switch is in the off-position before connecting to power source and/or battery pack, picking up or carrying the tool. Carrying power tools with your finger on the switch or energising power tools that have the switch on invites accidents.
d) Remove any adjusting key or wrench before turning the power tool on. A wrench or a key left attached to a rotating part of the power tool may result in personal injury.

e) Do not overreach. Keep proper footing and balance at all times. This enables better control of the power tool in unexpected situations.
f) Dress properly. Do not wear loose clothing or jewellery. Keep your hair and clothing away from moving parts. Loose clothes, jewellery or long hair can be caught in moving parts.
g) If devices are provided for the connection of dust extraction and collection facilities, ensure these are connected and properly used. Use of dust collection can reduce dust-related hazards.
h) Do not let familiarity gained from frequent use of tools allow you to become complacent and ignore tool safety principles. A careless action can cause severe injury within a fraction of a second.
I) This product is not a toy. Keep it out of reach of children.
J) Only use safety equipment that has been approved by an appropriate standards agency. Unapproved safety equipment may not provide adequate protection. Eye protection must be ANSI-approved and breathing protection must be NIOSH-approved for the specific hazards in the work area.
K) Do not lay the tool down until it has come to a complete stop. Moving parts can grab the surface and pull the tool out of your control.
L) When using a handheld power tool, maintain a firm grip on the tool with both hands to resist starting torque.
M) Do not leave the tool unattended when the Battery Pack is connected. Turn off the tool, and remove the Battery Pack before leaving.
N) People with pacemakers should consult their physician(s) before use. Electromagnetic fields in close proximity to heart pacemaker could cause pacemaker interference or pacemaker failure.
O) The warnings, precautions, and instructions discussed in this instruction manual cannot cover all possible conditions and situations that may occur. It must be understood by the operator that common sense and caution are factors which cannot be built into this product, but must be supplied by the operator

Power tool use and care

a) Do not force the power tool. Use the correct power tool for your application. The correct power tool will do the job better and safer at the rate for which it was designed.

b) Do not use the power tool if the switch does not turn it on and off. Any power tool that cannot be controlled with the switch is dangerous and must be repaired.
c) Disconnect the plug from the power source and/or remove the battery pack, if detachable, from the power tool before making any adjustments, changing accessories, or storing power tools. Such preventive safety measures reduce the risk of starting the power tool accidentally.
d)Switch off the appliance and disconnect from supply before changing accessories or approaching parts that move in use.
e)always disconnect the appliance from the supply if it is left unattended and before assembling, disassembling or cleaning
f) Store idle power tools out of the reach of children and do not allow persons unfamiliar with the power tool or these instructions to operate the power tool. Power tools are dangerous in the hands of untrained users.
g)Please properly keep product. Check whether the product is abnormal before use. If it is abnormal, please stop using it.
h)Please use the product according to the intended use, warn of potential injury from misuse.
i) Maintain power tools and accessories. Check for misalignment or binding of moving parts, breakage of parts and any other condition that may affect the power tools operation. If damaged, have the power tool repaired before use. Many accidents are caused by poorly maintained power tools.
j) Keep cutting tools sharp and clean. Properly maintained cutting tools with sharp cutting edges are less likely to bind and are easier to control.
k) Use the power tool, accessories and tool bits etc. in accordance with these instructions, taking into account the working conditions and the work to be performed. Use of the power tool for operations different from those intended could result in a hazardous situation.
l) Keep handles and grasping surfaces dry, clean and free from oil and grease. Slippery handles and grasping surfaces do not allow for safe handling and control of the tool in unexpected situations.
m) Please confirm the number of voltage volts before use. The working voltage is not more than ±5%. If it is more than that, it will cause motor burning and leakage accidents.

n) During construction, please pay attention to avoid water entering the motor or blocking the ventilation hole, so as not to reduce the heat dissipation performance of the motor and cause the motor to burn down.
o) In the steel plate construction, please pay attention to the safety of the lower layer of personnel and goods, iron beam and column drilling, pay attention to the safety of the structure of the building.
p) In suspension operation, the safety belt must be tightly tied and the magnetic drill fixed to prevent sudden power failure or power failure caused by accidents.
q) Do not cut the power cord or change the plug yourself. This will cause the machine to burn out.

Service

a) Have your power tool serviced by a qualified repair person using only identical replacement parts. This will ensure that the safety of the power tool is maintained.
b) In any case, it should be started in no-load state. It is forbidden to start with load, so as to avoid damage to the machine. Please pay attention to the stability of the magnetic drill when working at high altitude, so as to prevent the machine from falling down.
c) Ensure that the ground cable is grounded reliably.
d) When moving, the magnetic drill should be lifted to prevent damage to the magnetic base.
e) In the maintenance must use the original parts, in order to make the machine to achieve the best use state.
f) Maintain labels and nameplates on the tool. These carry important safety information. If unreadable or missing, contact VEVOR for a replacement.



Vibration Safety

This tool vibrates during use. Repeated or long-term exposure to vibration may cause temporary or permanent physical injury, particularly to the hands, arms and shoulders.To reduce the risk of vibration-related injury:
a. Anyone using vibrating tools regularly or for an extended period should first be examined by a doctor and then have regular medical check-ups to ensure medical problems are not being caused or worsened from use. Pregnant women or people who have impaired blood circulation to the hand, past hand injuries, nervous system disorders, diabetes, or Raynaud’s Disease should not use this tool. If you

feel any symptoms related to vibration (such as tingling, numbness, and white or blue fingers), seek medical advice as soon as possible.
b. Do not smoke during use. Nicotine reduces the blood supply to the hands and fingers, increasing the risk of vibration-related injury.
c. Wear suitable gloves to reduce the vibration effects on the use
d. Use tools with the lowest vibration when there is a choice.
e. Include vibration-free periods each day of work.
f. Grip tool as lightly as possible (while still keeping safe control of it). Let the tool do the work.
g. To reduce vibration, maintain the tool as explained in this manual. If any abnormal vibration occurs, stop use immediately.



Grounding Safety

TO PREVENT ELECTRIC SHOCK AND DEATH FROM INCORRECT GROUNDING: check with a qualified electrician if you are in doubt as to whether the outlet is properly grounded. Do not modify the power cord plug provided with the charger. Do not use the charger if the power cord or plug is damaged. if damaged, have it repaired by a service facility before use. if the plug will not fit the outlet, have a proper outlet installed by a qualified electrician.

DIAMOND CORE DRILL SAFETY WARNINGS

DANGER (Imminent hazard, death/serious injury)
Risk of electric shock. Do not allow water to enter the motor housing, power switch or power cable. Always use an RCD/GFCI protected power supply.
Rotating core bit may cause severe laceration or entanglement. Keep hands, clothing and body parts away from the working area at all times.
Flying debris may result in fatal injury. Never stand in the drilling ejection path.
WARNING (Potential hazard, may cause death/serious injury)
Read all instruction manuals, safety warnings and specifications before operation. Failure to comply may cause electric shock, fire and severe personal injury.
Always wear safety goggles, face shield, dust respirator, hearing protection, anti-slip safety shoes and heavy-duty work gloves.
Silica dust generated during concrete/masonry drilling causes serious respiratory

diseases. Use dust extraction or wet drilling system for ventilation.
Secure the core drill firmly with anchor bolts or vacuum base. Do not operate the machine by hand holding only.
Check diamond core bit for cracks, damage or wear before use. Do not use defective or mismatched drill bits.
Operate at low initial speed with uniform vertical pressure. Do not overexert or tilt the drill to prevent bit jamming, breaking or kickback.
Disconnect the power supply before replacing accessories, maintenance, cleaning or moving the equipment.
Keep children and bystanders at a safe distance from the workplace. Do not use the tool when tired, sick or under alcohol/drug influence.
For wet drilling: control standard water flow, prevent water leakage onto electrical components to avoid electric hazard.
CAUTION (Minor injury or equipment damage)
Do not block motor cooling vents. Clean dust and debris regularly to prevent overheating.
Match the rotating speed to the core bit diameter and workpiece material.
Allow the machine to cool down before servicing or storage.
Unauthorized modification of the tool is prohibited. All repairs must be performed by qualified professional personnel.
1. Use auxiliary handles supplied with the tool. Loss of control can cause personal injury.
2. Consider work area environment: Don’t use diamond core drill in damp or wet locations. Don’t expose diamond core drill to rain. Keep work area well-lit. In particular no inflammable liquids or gases must be present. The series motor produce sparks during normal rotating, the sparks may cause the risk of fire.
3. Grounding of class I tools is necessary while in use to protect you from electric shock, class I tools is equipped with an approved three-conductor cord and three-prong grounding-type plug, the green/yellow conductor in the cord is the grounding wire, one end of wire is in the grounding sign of tool outer shell, the other end of wire is connected with the ground wire of plug. Never connect the green/yellow wire to a live terminal.
4. The socket must fitted with grounding. Do not insert class I tools into the socket without grounding.

5. Use extension cords when tool is used outdoors or indoors, use special extension wire board. Use only three-conductor cord and with reliable grounding.
6. Take care of downward direction in the high position, safety belt and safety cap etc are recommended.
7. In order to avoid unintentional electric shock, please check the grounding condition of electrified body in working area before operating, it is not allowed to operate the tool under the uncertain condition, once the drill bit touched the electrified body in the wall, floorboard or baseboard, the electrified outer shell of drill may cause personal injuries.
8. The safety equipment is recommended when drilling on high the ceiling to avoid the drill core injuring the persons downstairs or damaging the property downstairs.
9. Connecting the soft pipe with the inner Φ9mm to the adaptor of the valve.
10. Please make sure that there is no leak of water in order that it will not damp the motor when you use the liquid and the attachments.
11. Usually inspect the hoses and other critical parts of the tool which could deteriorate; When appear of leak of water from the testing hole of the gear box, must turn off the tool immediately then replacing the rubber seal.
12. The maximum permitted pressure of the liquid supply is 0.12MPa.
13. Never to use the tool without the RCD provided.
14. You have to test the correct operation of the RCD before starting work: the red light will be on after pressing the button “RESET”; and the light will be off after pressing the button “TEST”; You can only to operate the tool when the RCD can work correctly.
15. Replacement of the plug or the supply cord shall always be carried out by the manufacturer of the tool or his service organization.
16. Keep liquid clear off the parts of the tool and away from persons in the working area in order that the water can not enter into the electronic equipment of the tool and keep your safety. It must be use catchment set when the machine working with elevation.

SAVE THESE INSTRUCTIONS

MODEL AND PARAMETERS

Model	Z1Z-CF-9180
Style	Portable / Rack
Input	US(AC120V 60Hz) / EUR(AC230V 50Hz)
Power	2200W (Note: Max. 2600W)
No – load speed	0-1500r/min
Max. Hollow Drilling	Φ20-Φ180mm(Brick wall)
Travel	400mm
Output shaft	Male thread: UNC1 1/4-7
Water inlet connection	Outside diameter: Φ9.2mm

STRUCTURE DIAGRAM

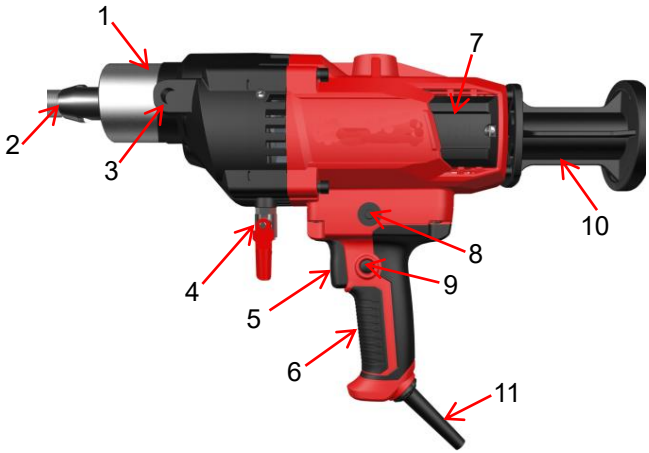

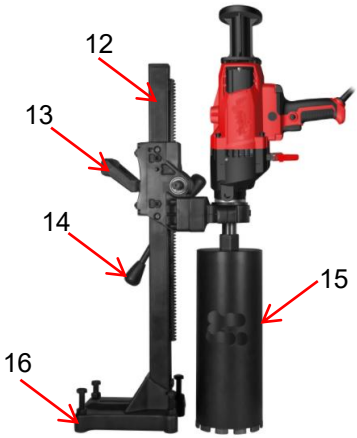

1. Handpiece
2. Output shaft
3. Auxiliary handle mounting position
4. Water inlet connection
5. Switch
6. Handle
7.Carbon brush position
8. Overload protection switch
9. Constant speed lock button
10. Shoulder rest
11. Power cord
12.Rack
13.Handle
14.Handle Rocker
15.Drill bit
16.Base

PACKAGE CONTENTS

Image	Item/Qty		Image	Item/Qty
	Core drill x1			Shoulder rest x1
	Rack x1			Handle rocker x1
	Auxiliary handle x1			Shock pad x1

	Drill bit x1 (Φ83mm)			Handle x1
	Wrench x3			Plum bolt x1
	Wrench(32-36) x1			Bolts x3
	Carbon brush x2 (8x18x22mm)			O-ring x2
	Bolts x4			Bolt x1
	User manual x1			Water pipe x1

NOTE: Some parts may be assembled together, please refer to the purchase.

ASSEMBLY GUIDE AND USE



1. Take out the accessory bag and install the rear bracket and auxiliary handle.

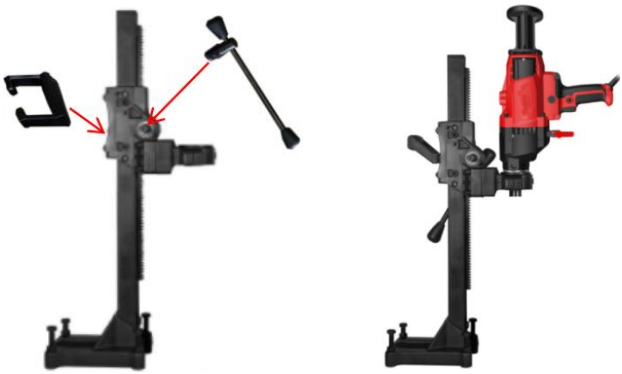

2. Install the rack as shown in the figure.



3. Connecting external water sources.

(NOTE: If there is water leakage, you can use the clamp firmly.)

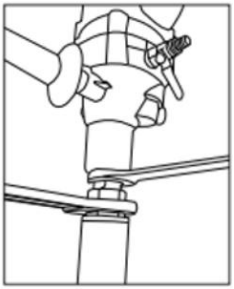

4. Tighten the drill bit with wrenches.



5. The use of leakage protection switch:

A) Plug into receptacle.

B) Press"RESET"button:indicator should be "ON".

C) Press "TEST"button:indicator should be "off ".

D) Press"RESET"button for use,do not use if “TEST” fails.

E) No overload protection.

DO NOT USE IF TEST FAILS!

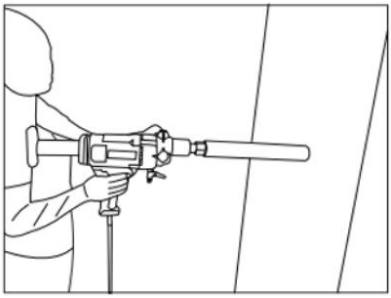

6. Fixed workpiece: The workpiece being drilled should be firmly fixed to prevent it from shaking or moving.

7. Correct operating posture: Maintain body balance and firmly hold the drilling machine with both hands.

8. Control drilling speed: Avoid pushing too fast to prevent machine overload or accidents.

9. Follow the operating procedures: strictly follow the instructions and relevant safety regulations of the drilling machine for operation.

HANDLING INSTRUCTIONS

1. How to install the drill

Before operating, fix the base on the work piece reliably and tightly, fasten it with expansion bolts, then fastening 4 bolts on the base uniformly, in the end, tightening them with the nuts.

2. Check the voltage:

Make sure the voltage is the same as that indicated on the board of the tools, the voltage in the circuits should be kept at +/-5%.

3. How to install bit:

Installing the diamond-thin bit carefully, the end thread shall match with the end output shaft. The end thread should be smeared with grease firstly, after tightening the drill bit, let it idly run, do make sure that its radial motion is corresponded with the general requirement, then you can operate the drill.

4. There are should some water in the water switch of drill.

5. Material:

When drilling on the reinforced concrete, if the drill bit touched the reinforcing steel bar, the current will be increased suddenly, the motor vibrated and the drill overloaded, at this time, the drill thrust should be reduced properly, the lower current can have a bad effect on the drill speed and the drill bit. If the grit, gravel falls into the drill or the drill touches the reinforcing steel bar, the drill will be caught, the higher excess current happened, and the clutch skidded, here, please shut off the tool, remove the drill bit and clean the clips in the gap, please wait for about 3 minutes, let the drill cool down before restarting the switch to continue drilling, when drilling the wood, thick blacktop and asphalt felt etc, its current will be increased, so please drill slowly, uniformly and slightly. If the clutch skidded continuously, please stop the drill and retighten the clutch.

6. Remove drill core:

When the drill bit almost drills through the floorboard or wall etc materials, be careful in reducing its drill speed to avoid drilling forcibly. When drilling again, please shut off the tool, remove the drill bit and clean its wall with water, after cleaning the chip, beat the drill slightly with the wood stick, be careful in removing the drill core and damaging the drill bit, then installing the drilling to continue operating.

7. Keep the motor ventilate and cool down:

During operating the ventilated notch of motor should not be clogged with dirt to avoid the higher temperature affecting the life of motor or burning down the winding.

8. Waterless operation forbidden:

When operation, there should be plenty of water flow onto the surface of the drill bit to cool down, and the mud can be washed out to avoid damaging the drill bit and sealing washer.

9. Avoid dampening the motor:

Do keep the enclosure of the motor away from the water to avoid reducing its insulating performance or leaking electricity. Only use the machine with the direction of vertical downward!

10. Drill vibrated

When drilling sometimes, the gap between the elevating body and square pipe and rack increased may cause the drill vibrated, at this time, please shut off the tool and adjust the track lining or idle wheel on elevating body, through tightening some relative bolts to adjust it to proper gap.

TROUBLE SHOOTING INSTRUCTION

Problem	Reason	Solution
Motor doesn't run When connecting Power supply.	1.Power supply disconnected. 2.Switch breaker positioned. 3.Brush ill contacting or use up. 4.The winding of stator & rotor circuit open.	1.Check and connect power supply. 2.Check and repair switch or replace improperly or ill contacting switch. 3.Replace electric brush. 4.Check or replace stator & rotor open circuit.
Heavy sparks and ring Sparks occur on Commutator of motor.	1.Rotor winding is on short circuit or open circuit. 2.Brush spring positioned Improperly or ill contacting. 3.Commutator worn seriously.	1.Repair or replace rotor. 2.Adjust the spring pressure. 3.Replace a new rotor.
Drill vibrated.	1.The base fixed loosened. 2.The gap between elevating body and square rack largened. 3.Elevating body and connecting bolts loosened.	1.Reassemble and fix the frame. 2.Adjust the gap. 3.Check bolt.
Drill speed is slow.	1.Drill bit worn. 2.Ceiling pouring quality is bad, there are grits or chips in gap. 3.Drill vibrated. 4.The nuts on the safety friction.	1.Repair or replace drill bit. 2.Stop the drill, remove the foreign materials from gap. 3.Adjust and tighten connecting bolt. 4.Tightening nuts clutch loosened.

MAINTENANCE AND STORAGE

NOTE: Please remove the plug before maintenance.

1. If the drill had any troubles, please send it to an authorized service center. It is not strictly allowed to dismantle or replace the parts optionally.
2. Please check the electric brush and commutator periodically, when the brushes are worn by the length of about 7mm, they must be changed. Use only original ones, otherwise, the commutator may be damaged, the both brushes must be changed at the same time. If you find heavy sparking in running or the commutator are worn or burned seriously, please check and repair the commutator or replace a new rotor.





3. The drill should be checked and repaired periodically after used for a long time. Its main items are: whether the electrical wire is good or not, the grounding is reliable or not, the inner wire, switch and plug works well or not, the insulating resistance of motor is safe or not, the stator and rotor are in short circuit or not, the bolts are loosened or not, please replace the lubricating oil and wearing parts etc.
4. Replace the rubber sealing washer in time. After using for a long time, if you find the water is coming in the top of the drill, please check and replace the sealing washer immediately. The gear in the gear case can use lubricating oil, if you find some lubricating oil penetrate the mid-cover air port, please replace the rubber sealing sealing oil ring on the rotor spindle. The brand of special lubricating oil is 110# industrial gear oil. It is not allowed to use common engine oil.
5. Keep the drill clean and dry If not in use, please clean the drill and it should be kept in dry, clean place, dismantle the drill bit, the main shaft of the drill and the connecting parts of drill thread should be smeared some grease so as to protect them.
6. Adjust safety clutch when you find the friction of clutch become too small.

