VEVOR

Upgrade · The Home Creator Way

DOCK LADDER USER'S MANUAL

MODEL:XT-C03，XT-C04，XT-C05

VEVOR
Support Center

XT-C03 XT-C04 XT-C05

VEVOR
Upgrade·The Home Creator Way

DOCK LADDER

MODEL:XT-C03，XT-C04，XT-C05

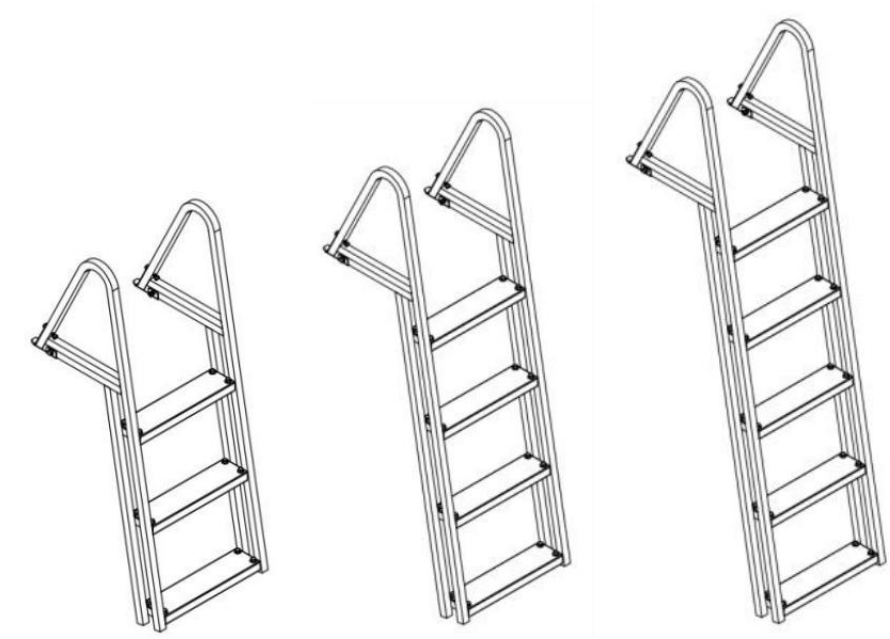

This is the original instruction, please read all manual instructions carefully before operating. VEVOR reserves a clear interpretation of our user manual. The appearance of the product shall be subject to the product you received. Please forgive us that we won't inform you again if there are any technology or software updates on our product.

SAFE INSTRUCTIONS

WARNING:

Carefully read instructions and procedures for safe operations. and SAVE THESE INSTRUCTIONS

Do not modify the ladder / platform design.

- Do not move a ladder / platform while standing on it.
- Do not use in bad weather, such as wind, rain, snow and so on；It is recommended to use the ladder in clear weather.

• Warning-To reduce the risk of injury, user must read instructions manual carefully.
• The product complies with relevant standards and regulations. Installation of this device must comply with all applicable regulations, and it should only be operated in well-ventilated areas. Please read the user manual before installing and using this equipment.
• This appliance is not intended for use by persons (including children) with reduced physical, sensory or mental capabilities, or lack of experience and knowledge, unless they have been given supervision or instruction concerning use of the appliance by a person responsible for their safety.
• Children shall not play with the appliance.
• Please properly keep product. Check whether the product is abnormal before use. If it is abnormal, please stop using it.
• Please use the product according to the intended use, warn of potential injury from misuse.

Before Use

1. Ensure that you are fit enough to use a ladder. Certain medical conditions or medication, alcohol or drug abuse could make ladder use unsafe;
2. When transporting ladders on roof bars or in a truck, ensure they are suitably placed to prevent damage;
3. Inspect the ladder after delivery and before first use to confirm condition and operation of all parts;

4. Visually check the ladder is not damaged and is safe to use at the start of each working day when the ladder is to be used;
5. For professional users, regular periodic inspection is required;
6. Ensure the ladder is suitable for the task;
7. Do not use a damaged ladder. Before using the ladder, ensure that the ladder is securely installed to prevent personal injury and accidents;
8. Remove any contamination from the ladder, such as wet paint, mud, oil or snow;
9. Before using a ladder at work, a risk assessment should be carried out respecting the legislation in the country of use;

10. When using the ladder, do not overload the ladder to avoid personal injury or accidents;

11. Do not use the ladder for two or more people at the same time;
12. Minors should only use ladders under the guidance of their guardians;
13. When using a ladder, climb up or down slowly to avoid personal injury or accidents caused by falling or bumping the ladder;
14. Before using a ladder after placing it for a long time, check whether the ladder is loose to prevent personal injury or accidents;
15. Before installing the ladder, ensure that the dock mounting plate is solid and ready for use;
16. To avoid personal injury, do not install a ladder if the dock mounting plate is rotten;

Positioning and Erecting the Ladder

1. Ladder shall be erected at the correct position, such as the correct angle for a leaning ladder;
2. Ladder shall be on an even, level and unmoveable base;
3. Leaning ladder should lean against a flat nonfragile surface and should be secured before use, e.g. tied or use of a suitable stability device;
4. When positioning the ladder, consider the risk of collision with the ladder e.g. from pedestrians, vehicles or doors. Secure doors (not fire exits) and windows where possible in the work area;
5. Identify any electrical risks in the work area, such as overhead lines or other exposed electrical equipment;

6.Ladder shall be stood on its feet, not the rungs or steps;
7.Ladders shall not be positioned on slippery surfaces (such as ice, shiny surfaces or significantly contaminated solid surfaces) unless additional effective measures are taken to prevent the ladder slipping or ensuring contaminated surfaces are sufficiently clean.

Using the Ladder

1.Do not exceed the maximum total load for the type of ladder;
2.Do not overreach; user should keep their belt buckle (navel) inside the stiles and both feet on the same step/rung throughout the task;
3.Ladders should only be used for light work of short duration;
4.Use non-conductive ladders for unavoidable live electrical work;
5.Do not use the ladder outside in adverse weather conditions, such as strong wind;
6.Take precautions against children playing on the ladder;
7.Secure doors (not fire exits) and windows where possible in the work area;
8.Face the ladder when ascending and descending;
9.Keep a secure grip on the ladder when ascending and descending;

PRODUCT INTRODUCTION

SPEC. \ Model	XT-C03	XT-C04	XT-C05
Steps	3	4	5
Step Spacing	300mm	300mm	300mm
Step Size(L*W)	400*100mm	400*100mm	400*100mm
Load Capacity	350Lbs	350Lbs	350Lbs
Material	Aluminum	Aluminum	Aluminum

PRODUCT DIAGRAM

（Take XT-03 as an example）

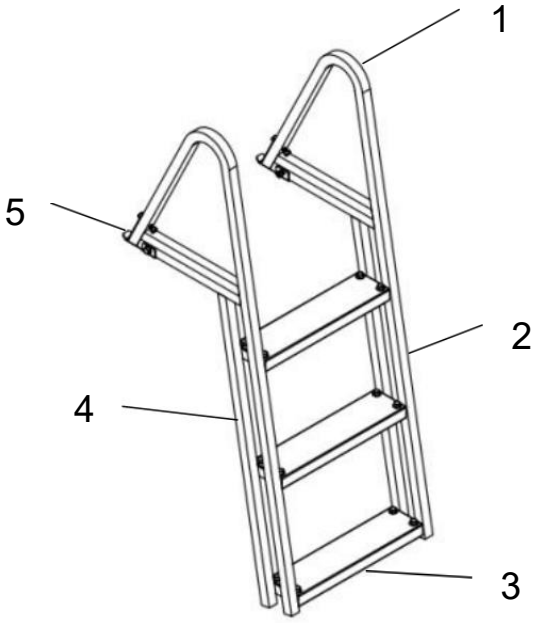

1.Handrail 2.Frame(right) 3. Step 4. Frame(left) 5. Clasp

COMPONENTS

NO.	Name	Picture	Q'ty of XT-C03	Q'ty of XT-C04	Q'ty of XT-C05
1	A		4	4	4
2	B		4	4	4
3	C		12	16	20
4	D		3	4	5
5	E		3	4	5
6	F		2	2	2
7	G		1	1	1
8	H		1	1	1

9	I		2	2	2

INSTALLATION INSTRUCTION

Installation preparation:

1. Two or more people to move and assemble the workbench.
2. Please prepare a carpet or mat to protect your floor you need to spread out all the accessories.
3. Please prepare gloves to avoid being scratched by sharp parts that may occur during installation.
4. Please open all the boxes to check if the accessories are complete and in good condition.
5. If you need to use power tools to install this product, please set the speed to low speed in advance.
6. When installing, please align all the holes and do not tighten all the screws first, otherwise, it may make the installation difficult.

Installation:

STEP 1: Pair the ladder steps(E) with a non-slip mat(D).

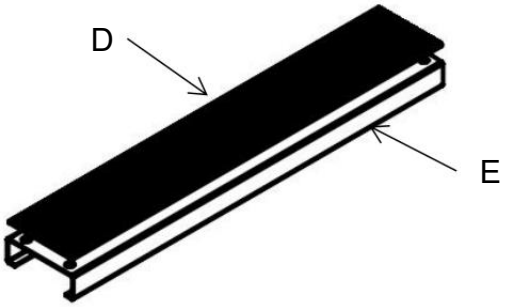

STEP 2: Install the ladder steps as shown. Note that pass the bolts through the mounting holes from top to bottom.

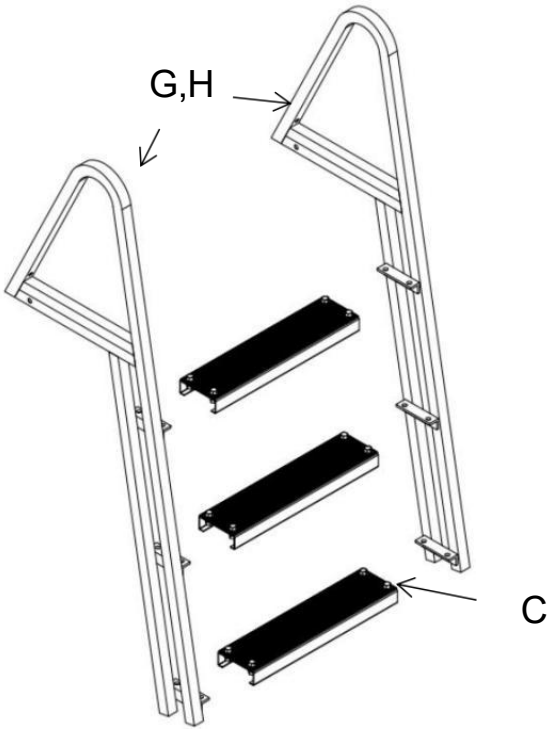

STEP 3: Install the clasps(F).Note that pass the bolts through the mounting holes from inside out.

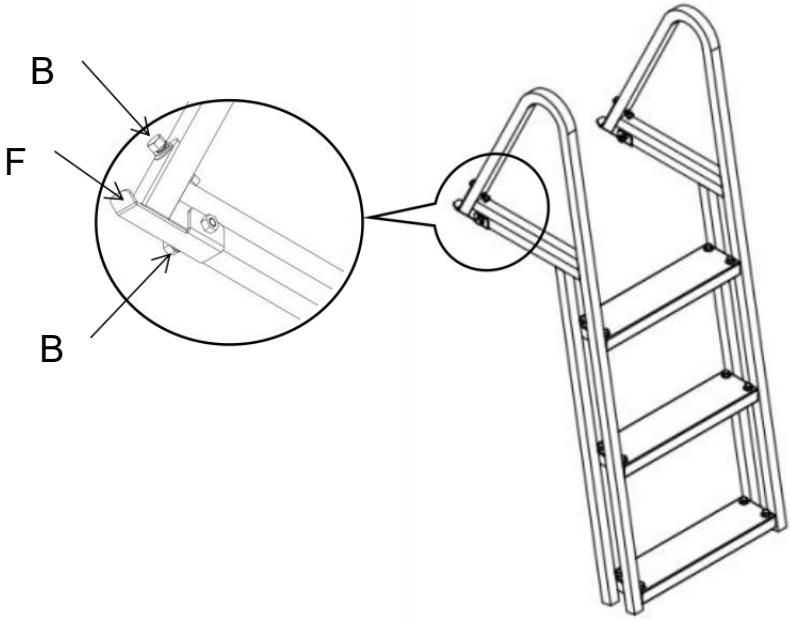

STEP 4: Re-confirm that all parts are locked. Install the clasp rack(I) on the dock mounting plate,and then hook the ladder.
(This product only provides accessories for wooden dock mounting plates. Other installation methods need to purchase additional accessories)

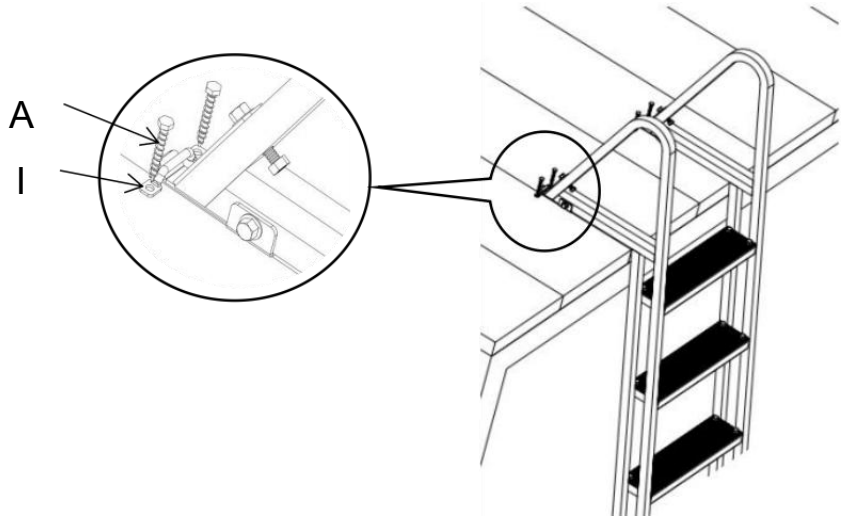

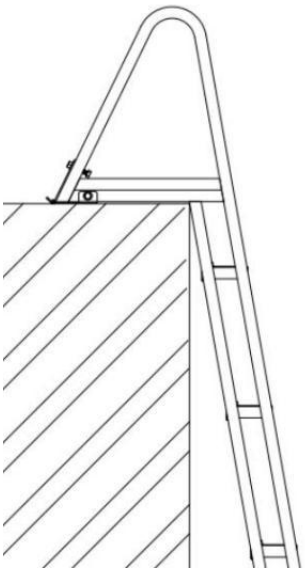

Note:

1. For a wooden dock mounting plate,the recommended thickness is greater than 50mm. Place the ladder at the appropriate position of the mounting plate and lock the ladder with the supplied tapping nails(A).
2. For a concrete dock mounting plate,the recommended thickness is greater than 80mm. Place the ladder at the appropriate position of the mounting plate and mark the installation holes,remove the ladder and drill holes 8mm in diameter and 70mm in depth at the marks,then fix the M6*60 expansion bolts in the hole,install the ladder on the expansion bolt and lock the nut.
3. For an iron dock mounting plate,the recommended thickness is greater than 5mm. Place the ladder at the appropriate position of the mounting plate and mark the installation holes,remove the ladder and drill holes 5.5mm in diameter at the marks,tap the teeth M6,then use stainless steel M6 bolts with gaskets to lock the ladder.

Above is the XT-C03 installation.The installation of the XT-C04，XT-C05 is the same as that of XT-C03.

CLEANING,MAINTENANCE AND TROUBLESHOOTING

1.Before use, please make sure that the dock ladder is installed firmly.
2.Before use,make sure the dock ladder is firmly fixed.
3.When assembling ladders, do not tighten all the screws first; Lock them completely after the installation.
4.When checking the ladder, if some parts are slightly deformed, it can be corrected with a mallet or other tools.
5.Do not overload the ladder when it is used.
6.If the ladder wobbles, stop using it, check whether it is loose, and tighten it again.
7.After each use, remove sand and dirt from the dock ladder and rinse it off with water.
8.If the ladder is not used for a long time, you are advised to disassemble and store it.
9.If some parts of the ladder are seriously damaged. Stop using the ladder and replace them.

Before storing ladders, clean and dry them and store them in a dry, ventilated environment.

