VEVOR

Upgrade · The Home Creator Way

C250242D-01

VEVOR Support Center

Executive Desk

Model: C250242D-01

VEVOR | Upgrade
The Home Creator Way

MODEL: C250242D-01

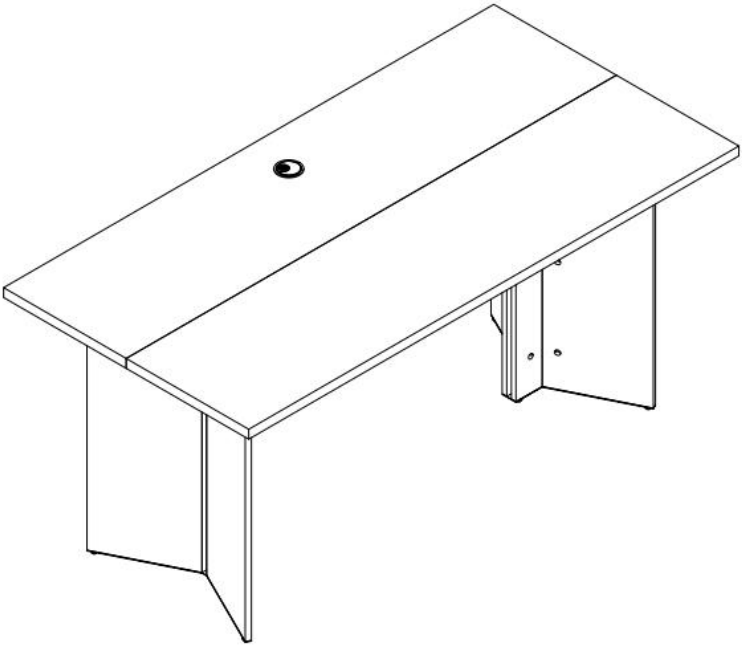

This is the original instruction, please read all manual instructions carefully before operating. VEVOR reserves a clear interpretation of our user manual. The appearance of the product shall be subject to the product you received. Please forgive us that we won't inform you again if there are any technology or software updates on our product.

SAFETY INSTRUCTIONS

INTRODUCTION

Thank you for purchasing our products. Committed to providing customers with the best quality products and service has always been our lifelong goal. Before using the product, please read this instruction manual carefully to ensure correct use. Keep the instruction manual in a place where the user can find it at any time.

ASSEMBLY PRECAUTIONS

There are many components and accessories in the package. Each component and accessory is labeled with a letter or a number, check carefully before using any of them. Keep them away from children to prevent accidents.

1. Assemble only according to these instructions. Improper assembly may create hazards.
2. Wear ANSI-approved safety goggles and heavy-duty work gloves during assembly.
3. Keep the assembly area clean and well-lit.
4. Keep bystanders out of the area during assembly.
5. Do not assemble if tired or when under the influence of alcohol, drugs or medication.
6. The product capabilities apply to properly and completely assembled products only.
7. Please install the product on a clean and soft underlay(such as carpet or cardboard)to avoid scratching or damaging the surface of the product.
8. If possible, you can use power tools to make assembly easier.
9. The main components of the product is relatively heavy. Please pay attention to safety during installation.
10. The product is not stable during installation, Please do not move it randomly before it is completely installed.

11. For additional information regarding the parts listed in the following pages, please refer to the Assembly Diagram of this manual. Unwrap and separate all parts in a clean work area.

***PLEASE BE SURE TO FOLLOW THE INSTALLATION STEPS IN THE MANUAL TO AVOID UNNECSSARY LOSSES CAUSED BY IMPROPER INSTALLATION.**

USE PRECAUTIONS

1. The product complies with relevant standards and regulations. Installation of this device must comply with all applicable regulations, and it should only be operated in well-ventilated areas. Please read the user manual before installing and using this equipment.
2. This appliance is not intended for use by persons (including children) with reduced physical, sensory or mental capabilities, or lack of experience and knowledge, unless they have been given supervision or instruction concerning use of the appliance by a person responsible for their safety.
3. Children shall not play with the appliance.
4. Please properly keep product. Check whether the product is abnormal before use. If it is abnormal,please stop using it.
5. Please use the product according to the intended use, warn of potential injury from misuse.
6. This appliance is intended to be used in:
   Offices,Meeting rooms, School classrooms, teacher offices,Home office areas,etc..

SAVE THESE INSTRUCTIONS

EXPLODED VIEW

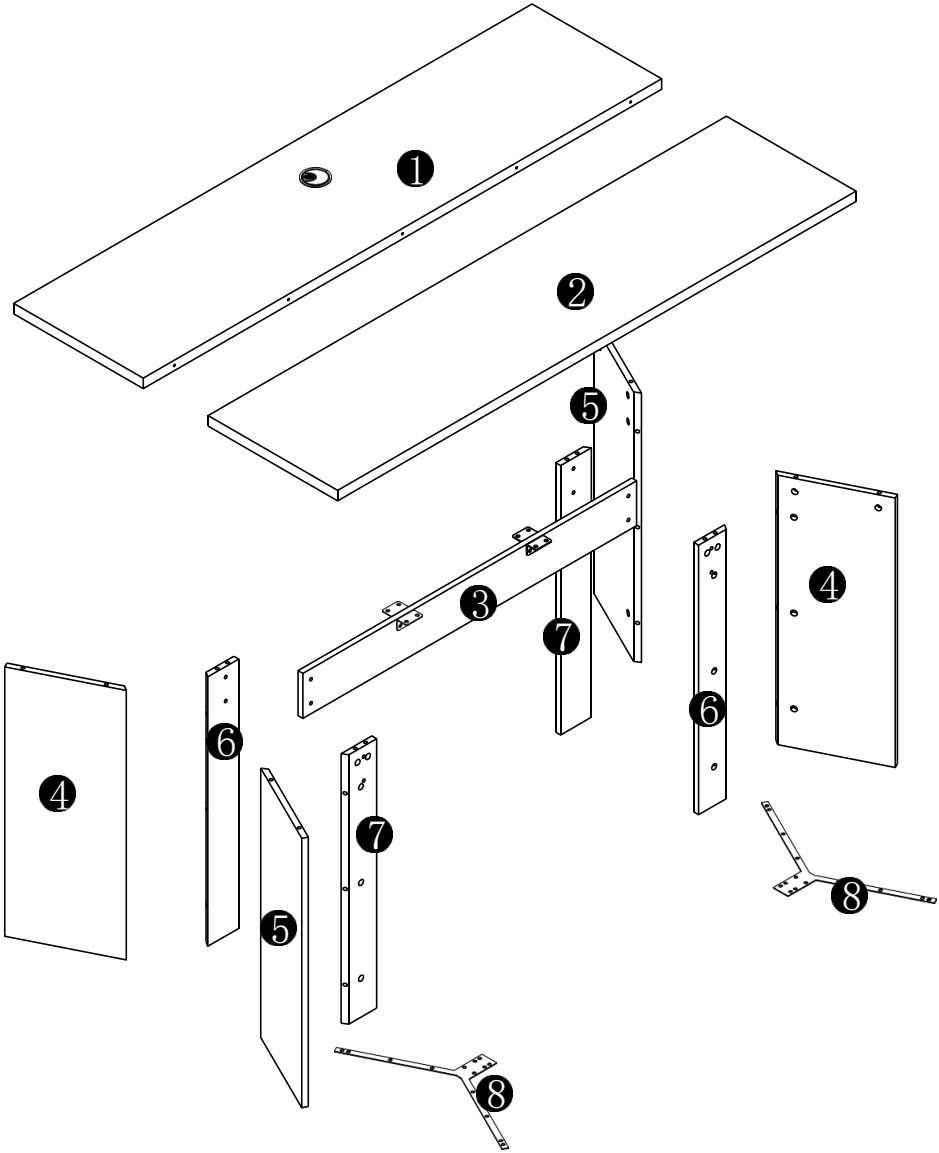

PARTS LIST

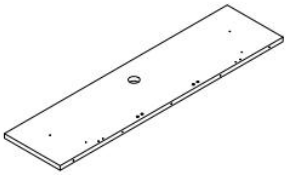

❶ 1pc

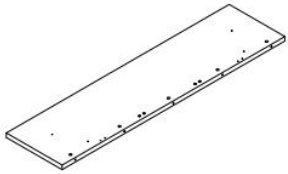

❷ 1pc

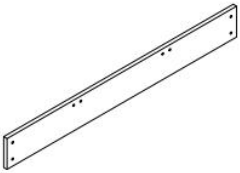

❸ 1pc

❹ 2pcs

❺ 2pcs

❻ 2pcs

❼ 2pcs

❽ 2pcs

PARTS LIST

M6X40MM **A** 21pcs	M7X50MM **B** 20pcs	**C** 45pcs
80MM **D** 12pcs	M6X28MM **F** 4pcs	M6X55MM **K** 4pcs
M6X12MM **N** 8pcs	M6 **V** 8pcs	**W** 4pcs
M6X16MM **Y** 8pcs	ϕ60 **Z** 1pc	1pc

Installation of Cams and Pins

Screw the pin into the hole. To set the cams correctly, ensure that the arrow on the cam is opening to the hole of the pin it is locking. Lock the cam by turning the cam head with a screwdriver until it is tightened. Please do not use an electric screwdriver to assemble the unit.

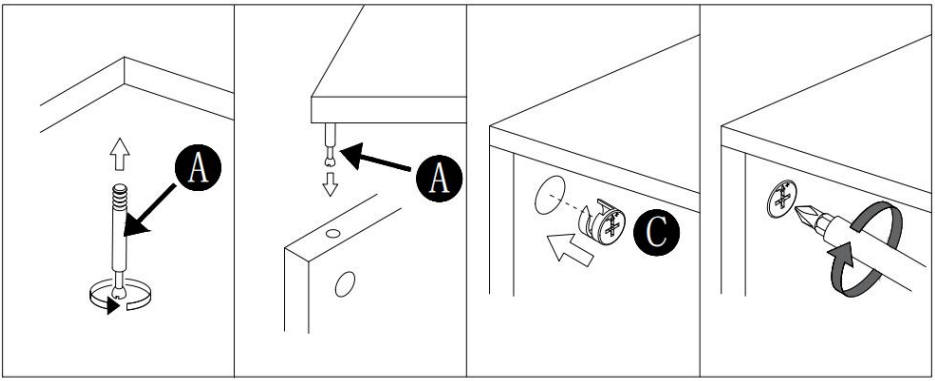

Read each step carefully before starting. It is very important that each step of instruction is performed in the correct order. If these steps are not followed in sequence, assembly difficulties will occur.

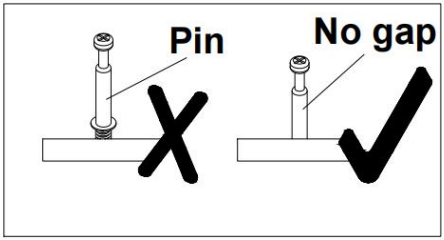

ASSEMBLY STEP

1

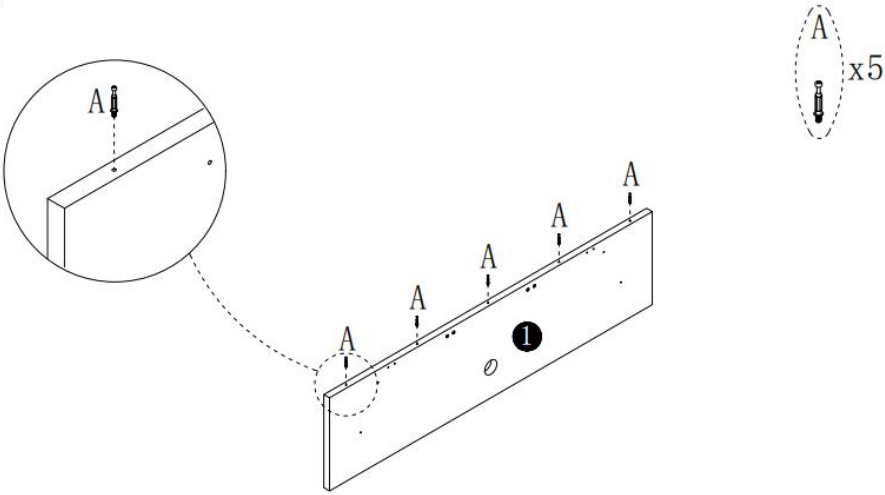

2

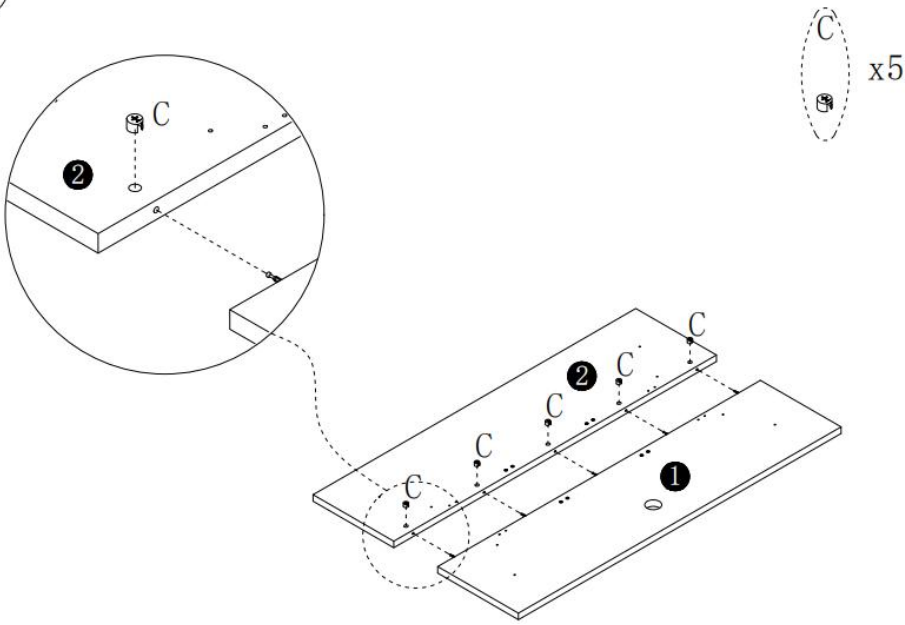

3

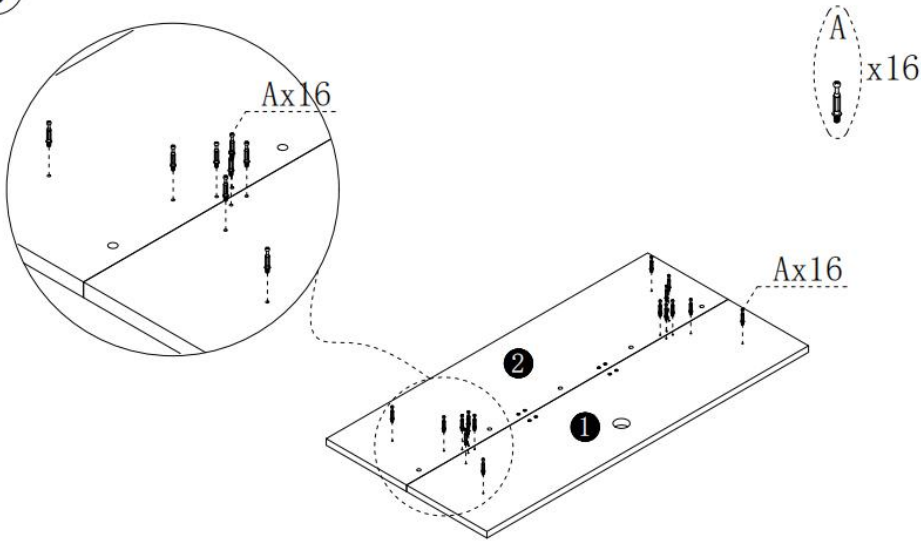

4

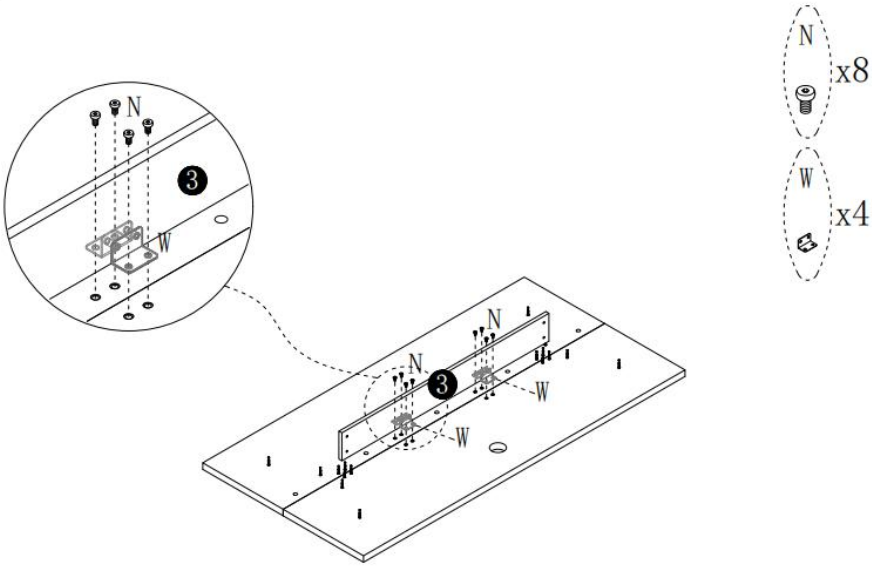

5

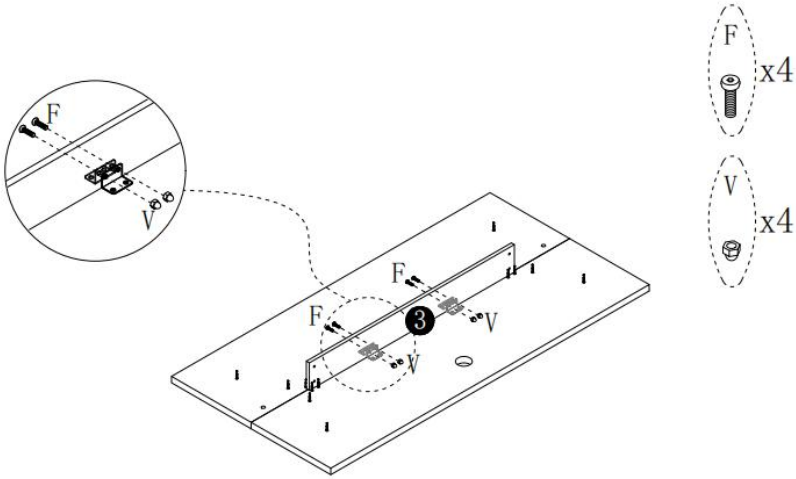

6

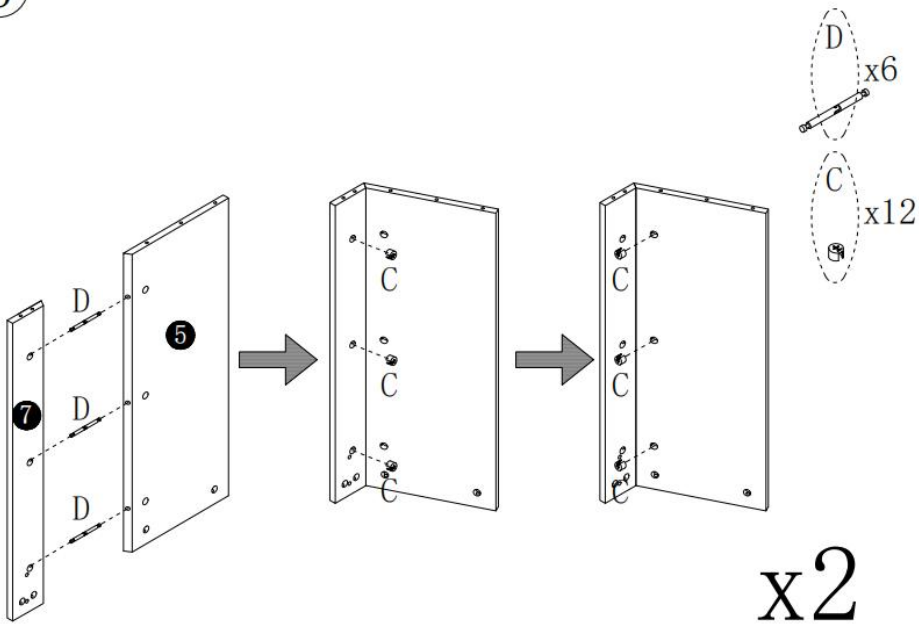

7

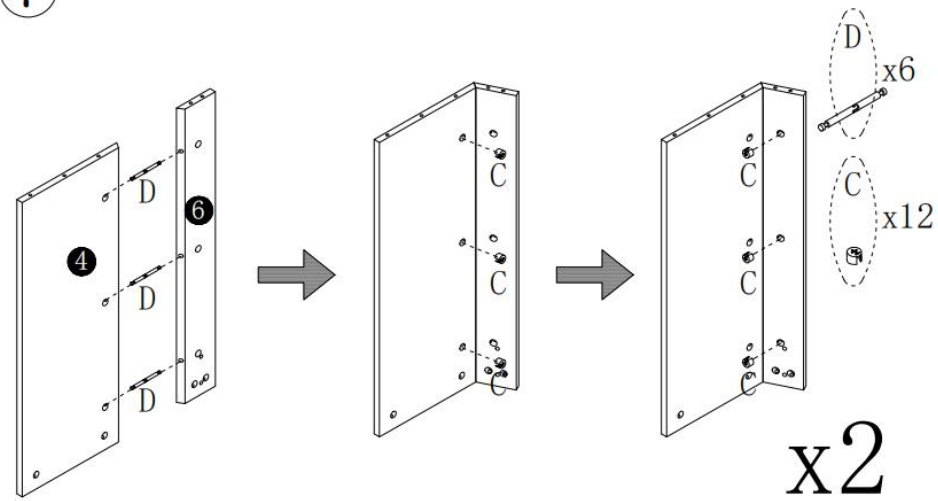

8

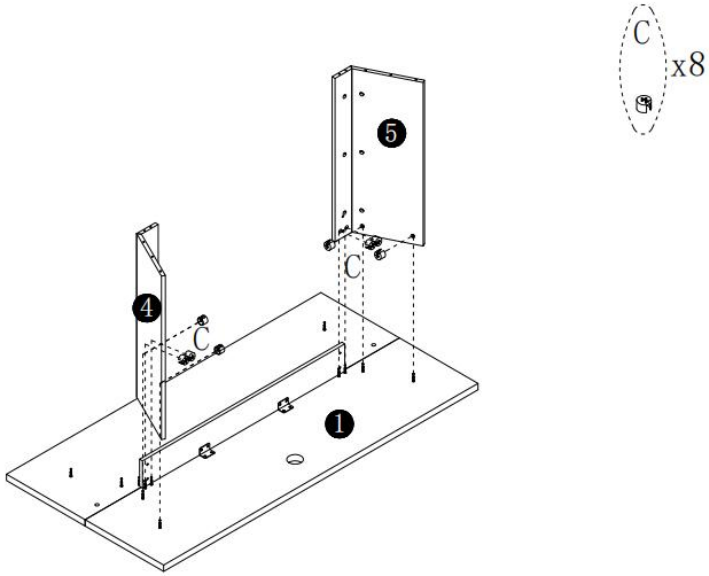

9

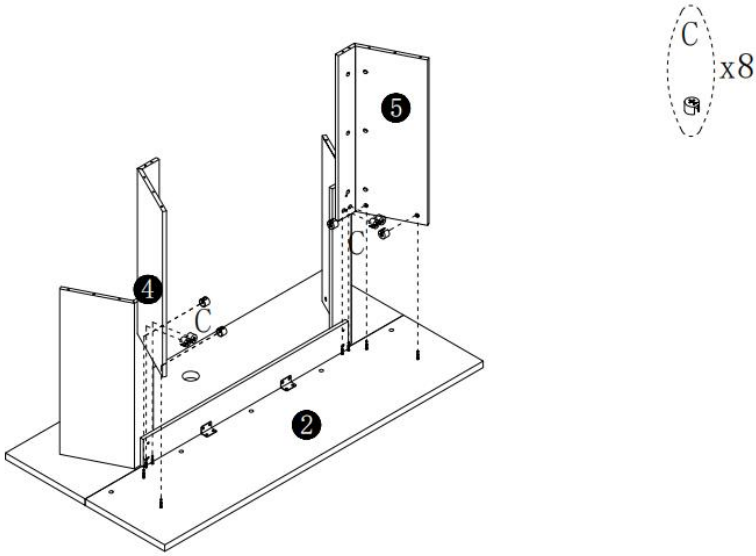

10

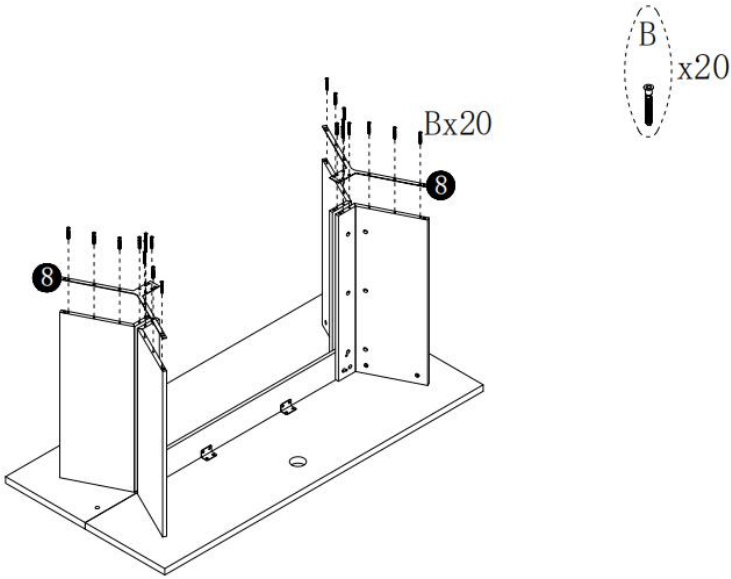

11

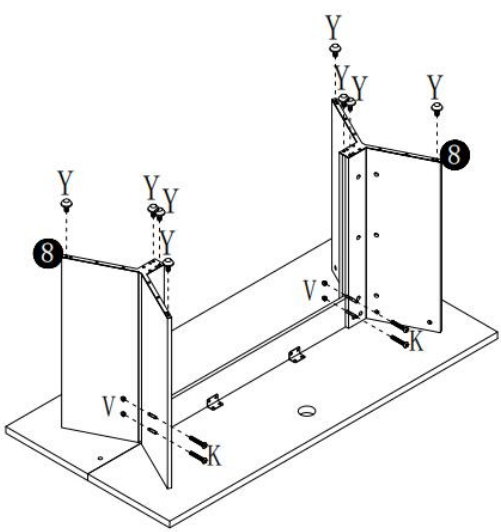

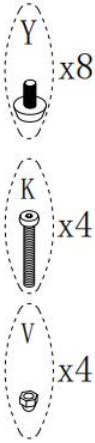

12

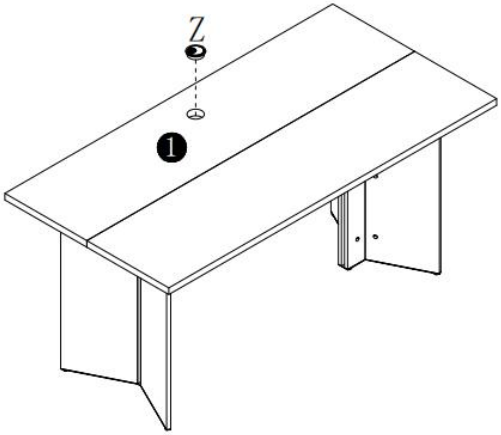

13

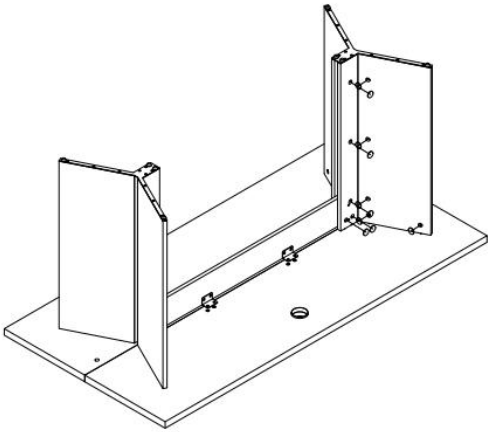

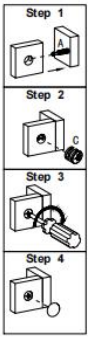

14

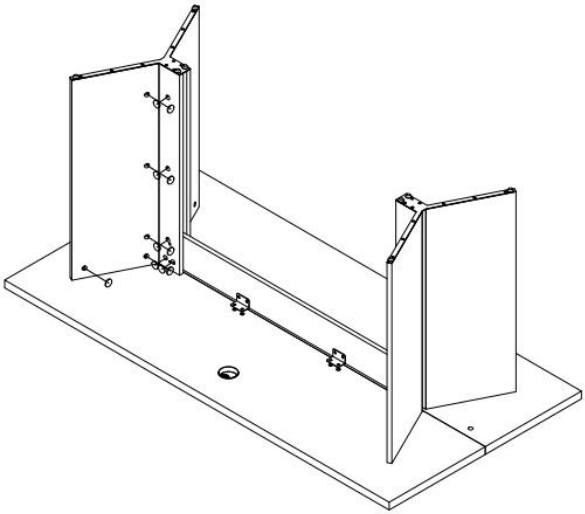

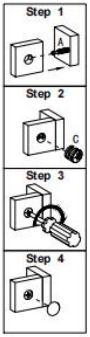

PRODUCT PARAMETER

Model	C250242D-01
Safe Loading Weight	250 lbs
Product Size(D*W*H)	1600*800*760mm

* Products such as specifications, appearance, and design are subject to modification without prior notice.