Montageanleitung | Instructionsde montage Assembly Instructions | Instruccionesde montaje

SKUNUMBER:
N636P414915/N636P414916

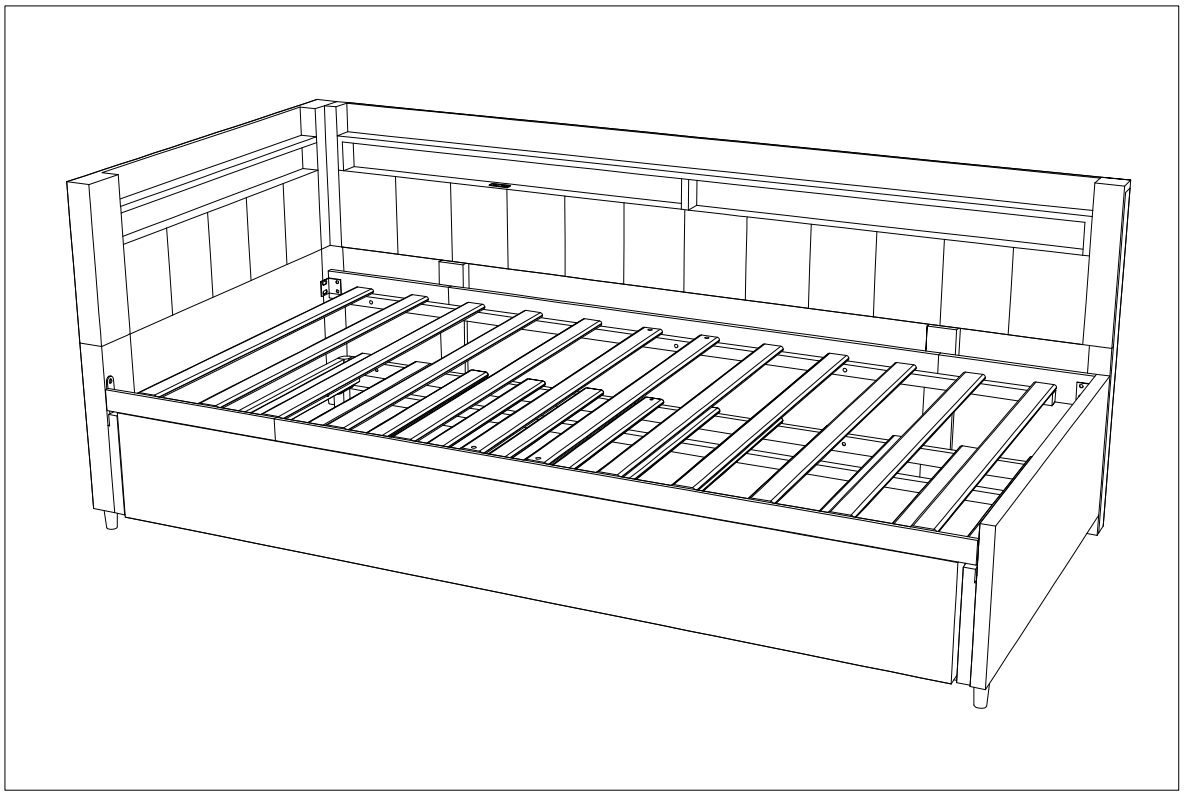

DE Unser Produkt wird Ihnen in 2 Paketen geliefert. Die Lieferzeiten dieser 2 Pakete können abweichen, bitte haben Sie etwas Geduld und vielen Dank für Ihr Verständnis.

UK Our product will be delivered to you in 2 packages. The delivery times of these 2 packages may differ, please be patient and thank you for your understanding.

FR Notre produit vous sera livré en 2 colis. Les délais de livraison de ces 2 colis peuvent différer, soyez patient et merci pour votre compréhension.

FR Cet appareil, ses cordons, et batterie se recyclent
À DÉPOSER EN MAGASIN OU À DÉPOSER EN DÉCHÈTERIE
Points de collecte sur www.quefairedemesdechets.fr
Privilégiez la réparation ou le don de votre appareil !

DE: Vor dem Einbau die Schrauben in die Löcher stecken und festziehen, aber nicht bis 100%, 70% bis 80% anziehen reicht aus. Schließlich, nachdem alle Schrauben installiert sind, ziehen Sie alle Schrauben auf 100 %.Wenn Sie auf diese Probleme stoßen, wie z. B. Fehlausrichtung der Löcher oder Unfähigkeit, bestimmte Teile zu installieren, überprüfen Sie bitte, ob die Schrauben korrekt verwendet werden und passen Sie die Dichtigkeit der Schrauben an.

UK: Before installation, insert the screws into the holes and tighten them, but do not tighten them to 100%, 70% to 80% is sufficient. Finally, after all screws are installed, tighten all screws to 100%.If you encounter these issues, such as if the holes cannot be aligned or some parts cannot be installed, please check if the screws are used correctly and adjust the tightness of the screws.

FR: Insérer la vis dans le trou avant la fin de l'assemblage, serrer la vis, mais ne pas serrer à 100%, 70% ~ 80% est correct. Enfin, une fois que toutes les vis sont bien serrées, toutes les vis sont serrées à 100%.Si vous rencontrez ces problèmes, par exemple si les trous ne sont pas alignés ou si certaines pièces ne peuvent pas être montées, vérifiez que les vis sont utilisées correctement et Ajustez leur serrage.

English

IMPORTANT ! KEEP FOR FUTURE REFERENCE : READ CAREFULLY

- To be assembled by an adult. Assembly must be checked by an adult before use
- WARNING ! Keep all screws, small parts and plastic bags out of the reach of children
- Properly identify all parts before assembling
- Never use your item if any of its parts are broken or missing
- Should any problems arise, please contact our After Sales Service
- Manufacturer's instructions shall be followed at all times
- Care: Clean with a soft, dry cloth. In case of larger stains, carefully rub with a slightly damp, non-abrasive sponge
- Avoid the risk of fire by not placing furniture near sources of ignition or hot items
- Do not jump on the bed

Deutsch

WICHTIG ! ZUM SPÄTEREN NACHSCHLAGEN AUFBEWAHREN: SORGFÄLTIG LESEN

- Muss von einem Erwachsenen zusammengebaut werden.Der Zusammenbau muss vor dem Gebrauch von einem Erwachsenen überprüft werden
- WARNUNG! Bewahren Sie alle Schrauben, Kleinteile und Plastikbeutel außerhalb der Reichweite von Kindern auf
- Kennzeichnen Sie vor dem Zusammenbau alle Teile richtig
- Benutzen Sie Ihren Artikel niemals, wenn Teile gebrochen sind oder fehlen
- Sollten Probleme auftreten, wenden Sie sich bitte an unseren Kundendienst
- Die Anweisungen des Herstellers sind stets zu befolgen
- Pflege: Mit einem weichen, trockenen Tuch reinigen. Bei größeren Flecken vorsichtig mit einem leicht feuchten, nicht scheuernden Schwamm abreiben. nicht scheuernden Schwamm
- Vermeiden Sie die Gefahr eines Brandes, indem Sie die Möbel nicht in der Nähe von Zündquellen oder heißen Gegenständen aufstellen
- Nicht auf das Bett springen

Français

IMPORTANT ! CONSERVER POUR RÉFÉRENCE ULTÉRIEURE : LIRE ATTENTIVEMENT

- Le montage doit être effectué par un adulte. Le montage doit être vérifié par un adulte avant Utilisation
- ATTENTION ! Tenir les vis, les petites pièces et les sachets en plastique hors de portée des enfants
- Identifiez correctement toutes les pièces avant de les assembler
- N'utilisez jamais votre article si l'une de ses pièces est cassée ou manquante
- En cas de problème, veuillez contacter notre service après-vente
- Les instructions du fabricant doivent être respectées à tout moment
- Entretien : nettoyer avec un chiffon doux et sec. En cas de taches plus importantes, frotter soigneusement avec une éponge non abrasive légèrement humide. légèrement humide et non Abrasive
- Évitez les risques d'incendie en ne plaçant pas les meubles à proximité de sources d'inflammation ou d'objets chauds
- Ne pas sauter sur le lit

Italiano

IMPORTANTE! CONSERVARE PER RIFERIMENTO FUTURO: LEGGERE ATTENTAMENTE

- Deve essere assemblato da un adulto. L'assemblaggio deve essere controllato da un adulto prima dell'uso
- ATTENZIONE! Tenere tutte le viti, le piccole parti e i sacchetti di plastica fuori dalla portata dei bambini
- Identificare correttamente tutte le parti prima dell'assemblaggio
- Non utilizzare mai l'articolo se alcune parti sono rotte o mancanti
- In caso di problemi, si prega di contattare il nostro Servizio Post Vendita
- Le istruzioni del produttore devono essere sempre seguite
- Cura: Pulire con un panno morbido e asciutto. In caso di macchie più estese, strofinare accuratamente con una spugna leggermente umida e nonspugna leggermente umida e non abrasiva
- Evitare il rischio di incendio, non collocando i mobili vicino a fonti di accensione o a oggetti caldi
- Non saltare sul letto

Español

¡ IMPORTANTE ! CONSÉRVELO PARA FUTURAS CONSULTAS: LEA ATENTAMENTE

- Debe ser montado por un adulto. El montaje debe ser comprobado por un adulto antes del uso

ADVERTENCIA Mantenga todos los tornillos, piezas pequeñas y bolsas de plástico fuera del alcance de los niños.

- Identifique correctamente todas las piezas antes de montarlas
- Nunca utilice su artículo si alguna de sus piezas está rota o falta
- Si surge algún problema, póngase en contacto con nuestro Servicio Postventa
- Las instrucciones del fabricante deben seguirse en todo momento
- Cuidado: Limpiar con un paño suave y seco. En caso de manchas más grandes, frote cuidadosamente con una esponja no abrasiva ligeramente humedecida.
- Evite el riesgo de incendio no colocando los muebles cerca de fuentes de ignición u objetos calientes.
- No saltar sobre la cama.

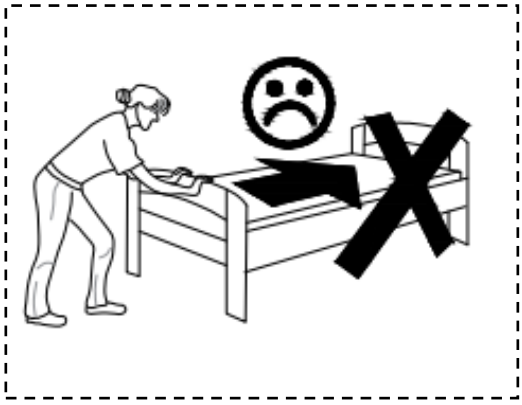

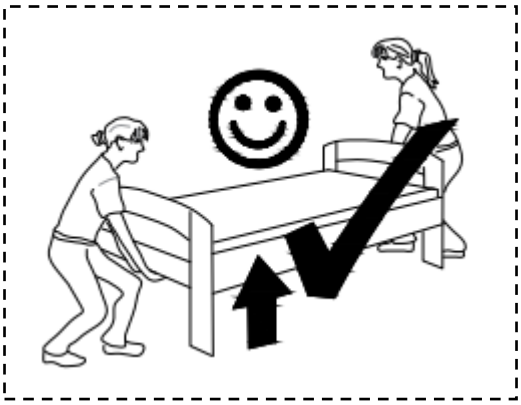

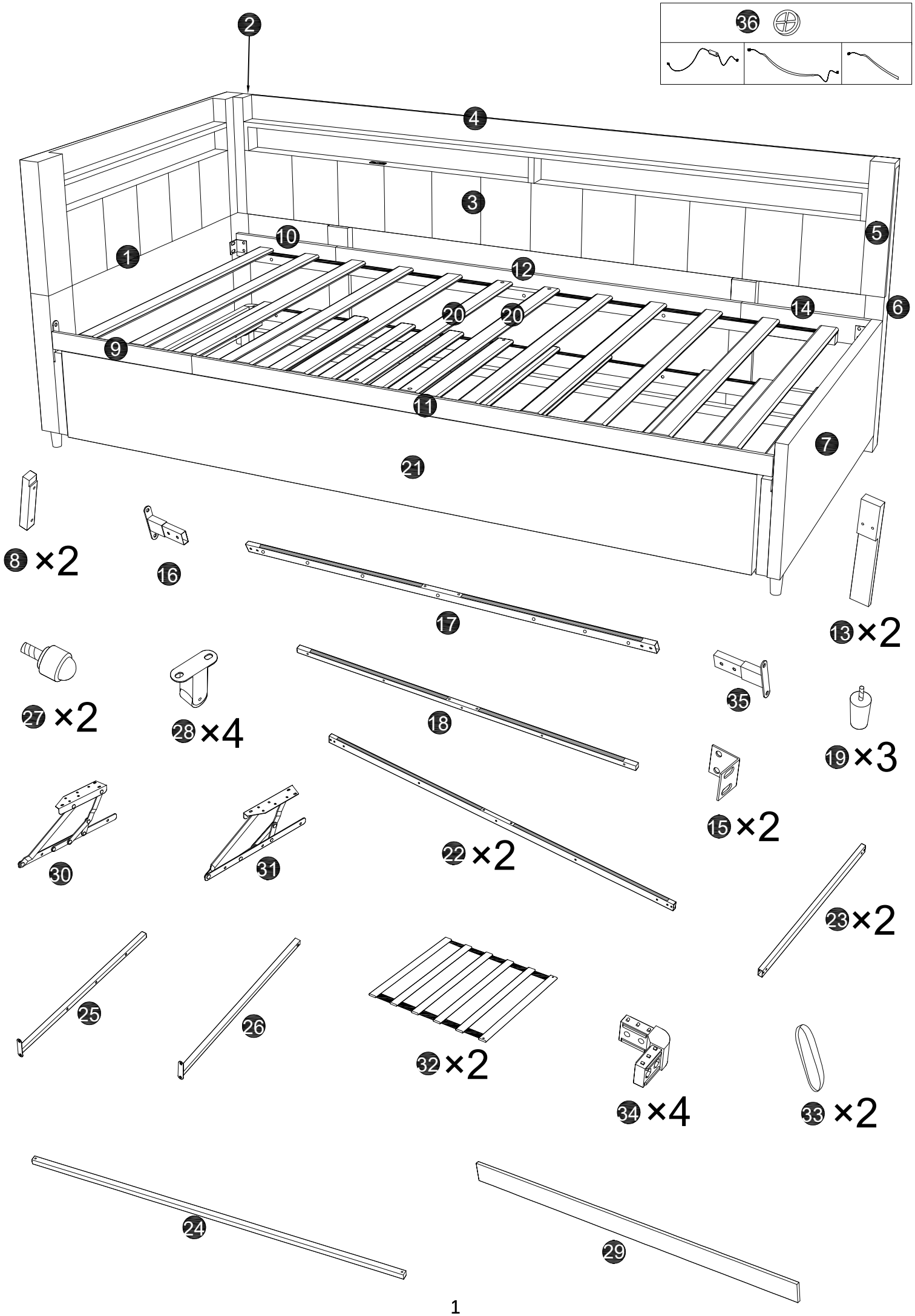
36
2
4
3
5
10
1
12
14
6
20
20
9
11
7
21
8 ×2
16
17
13 ×2
27 ×2
28 ×4
18
35
19 ×3
15 ×2
22 ×2
30
31
23 ×2
25
26
32 ×2
34 ×4
33 ×2
24
29

Part List/ Teileliste/ Liste des pièces

N636P414915

2	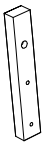	×1	3	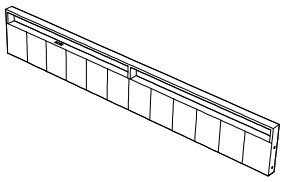	×1
4	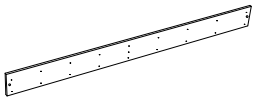	×1	5		×1
6	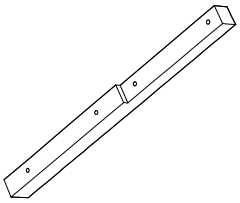	×1	7	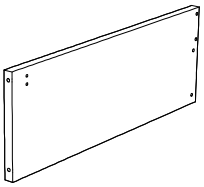	×1
8		×2	9	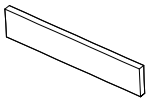	×1
10	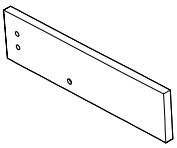	×1	11	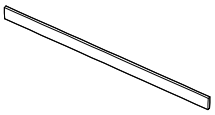	×1
12	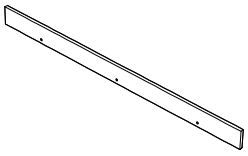	×1	13	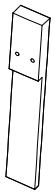	×2
14	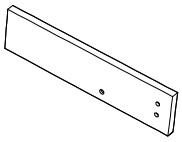	×1	17	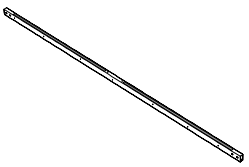	×1
18		×1	21	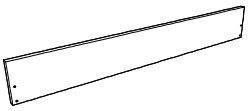	×1
22	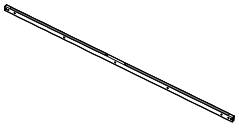	×2	23	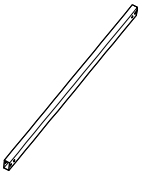	×2

Part List/ Teileliste/ Liste des pièces
N636P414915

24		×1	29	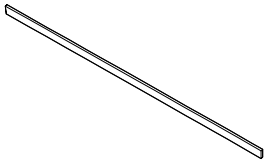	×1

Part List/ Teileliste/ Liste des pièces
N636P414916

1	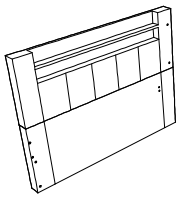	×1	15		×2
16	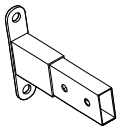	×1	19	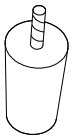	×3
20	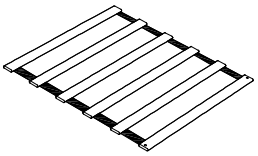	×2	25	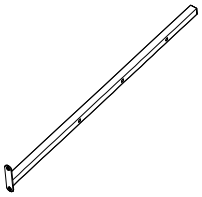	×1
26	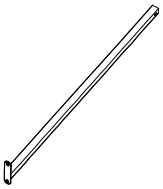	×1	27	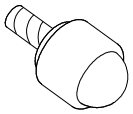	×2
28	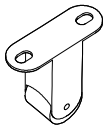	×4	30	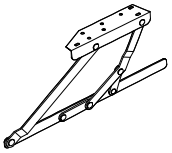	×1
31	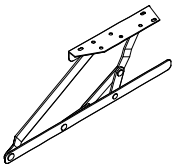	×1	32	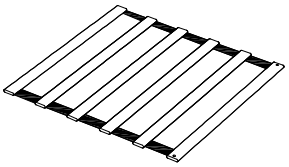	×2
33		×2	34	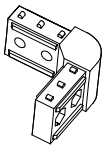	×4

Part List/ Teileliste/ Liste des pièces

N636P414916

35	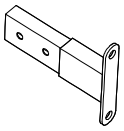	×1

36		×1

Hardware List/ Hardware-Liste/ Liste du matériel

N636P414916

A	M8*18MM	×40
C	M8*35MM 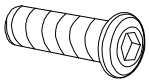	×2
E	M8*45MM 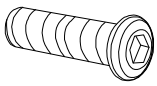	×14
G	M6*14MM 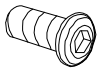	×8
I	φ3*25MM	×19
K	M6 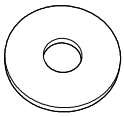	×2

B	M8*30MM 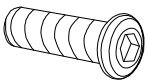	×4
D	M8*40MM 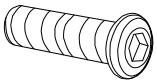	×5
F	M8*75MM 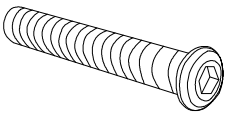	×3
H	M6*30MM 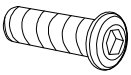	×20
J	φ3*35MM	×2
L	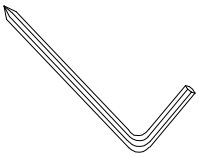	×1

1

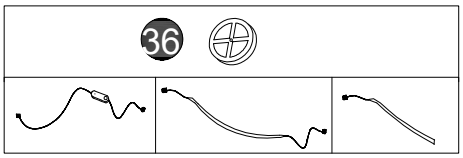

EN:Scan to download App control the Led light.
DE:Scannen, um die App zum Steuern des LED-Lichts herunterzuladen
FR:Scanner pour télécharger App contrôler la lumière Led.

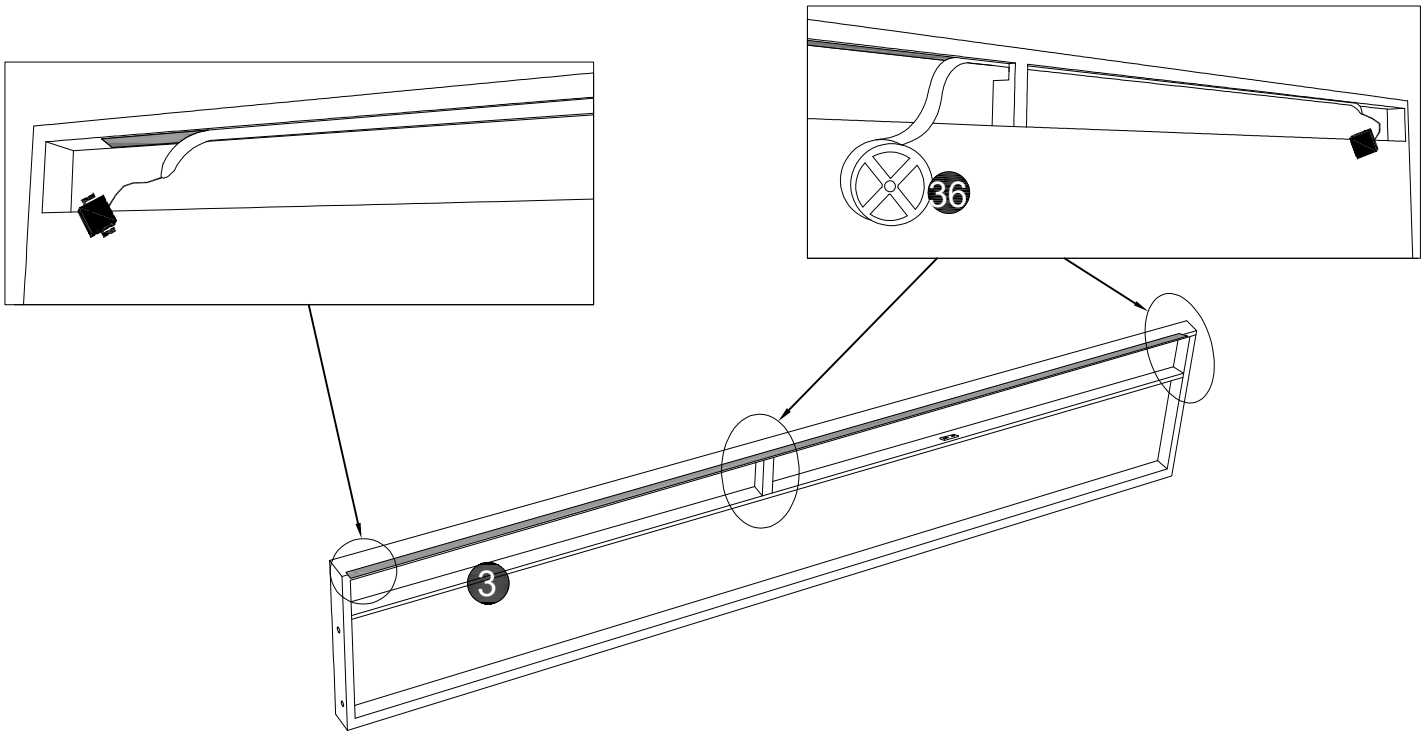

2

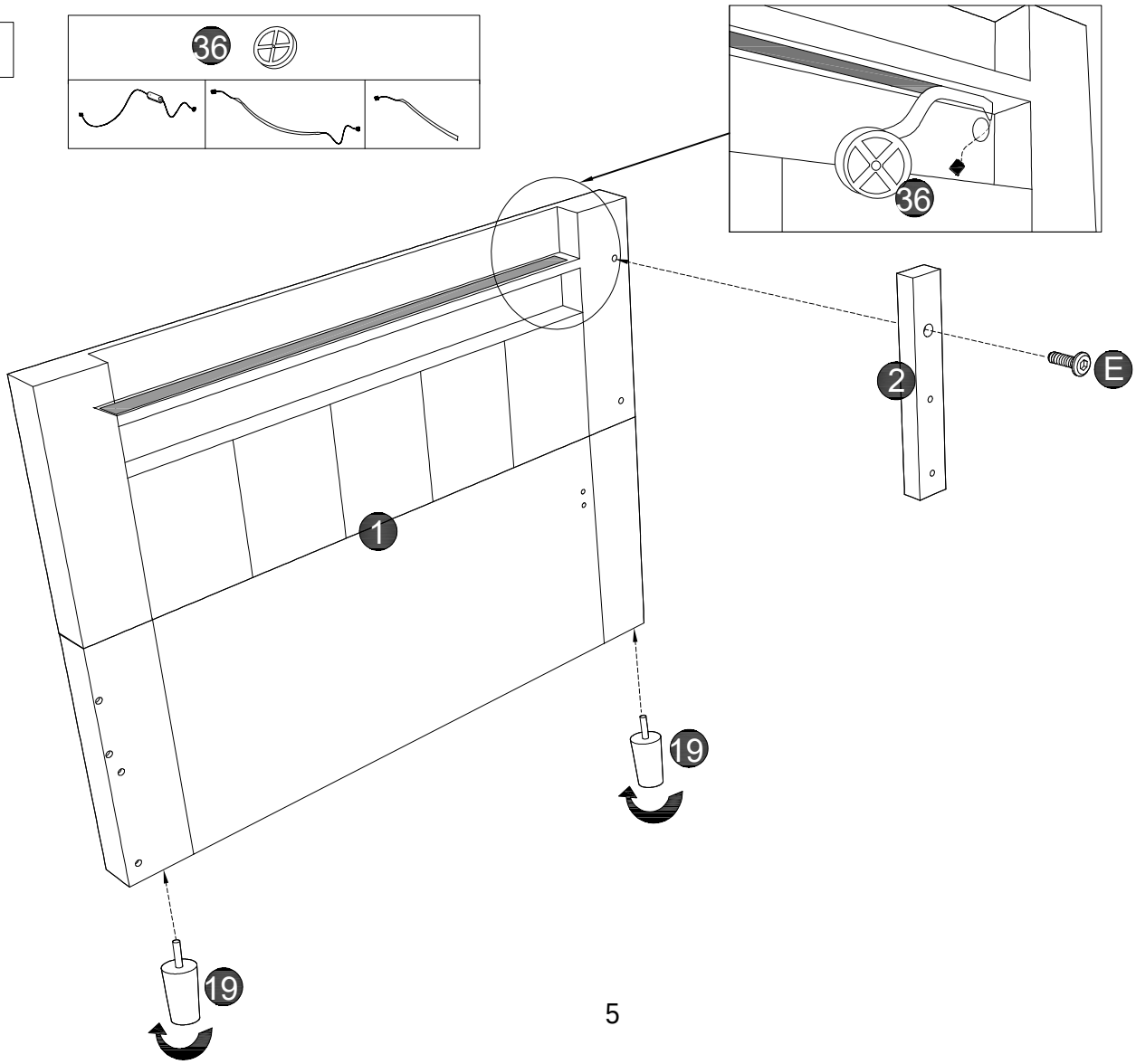

3

φ3*25MM

I*19PCS

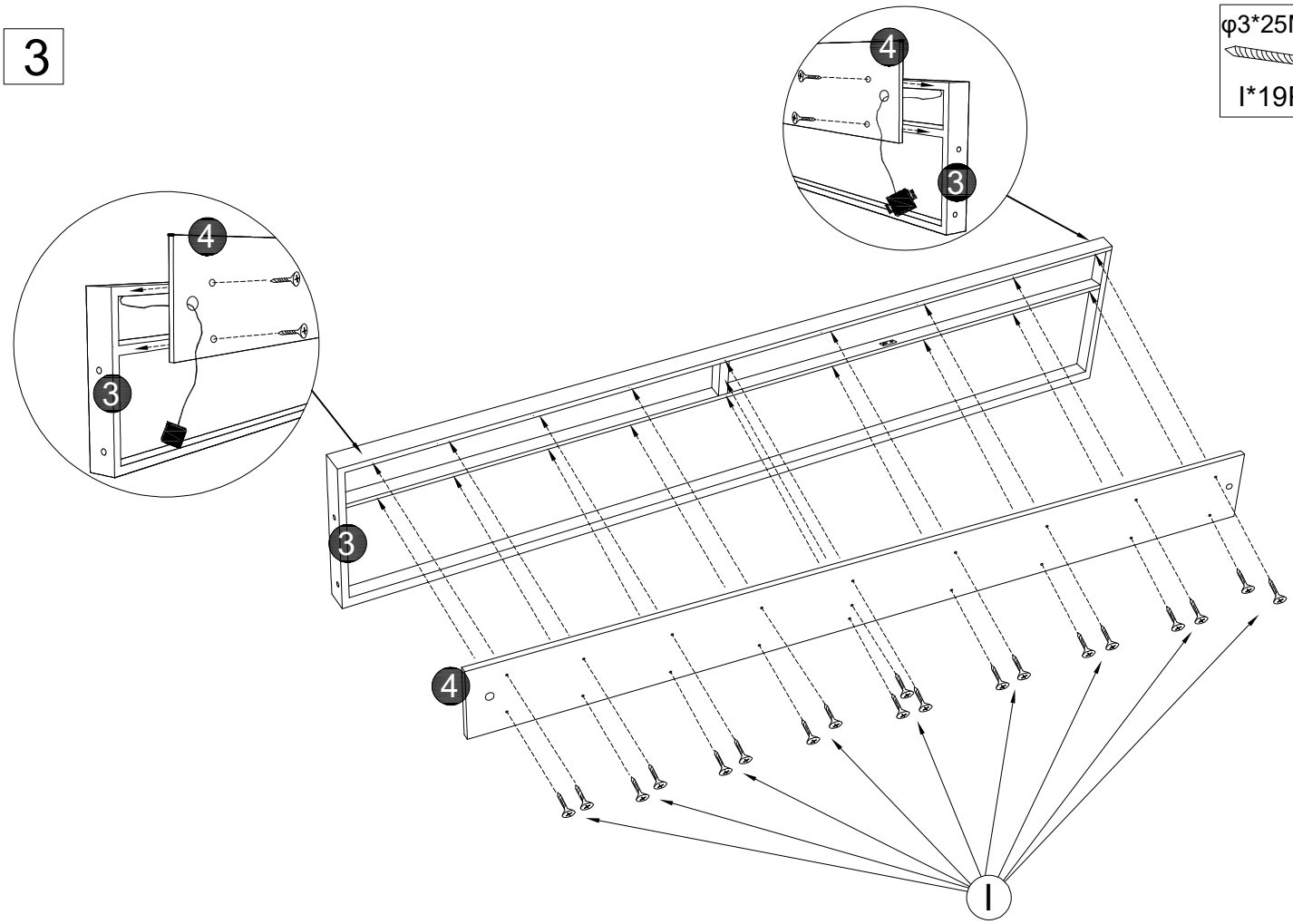

4

M8*35MM

C×2PCS

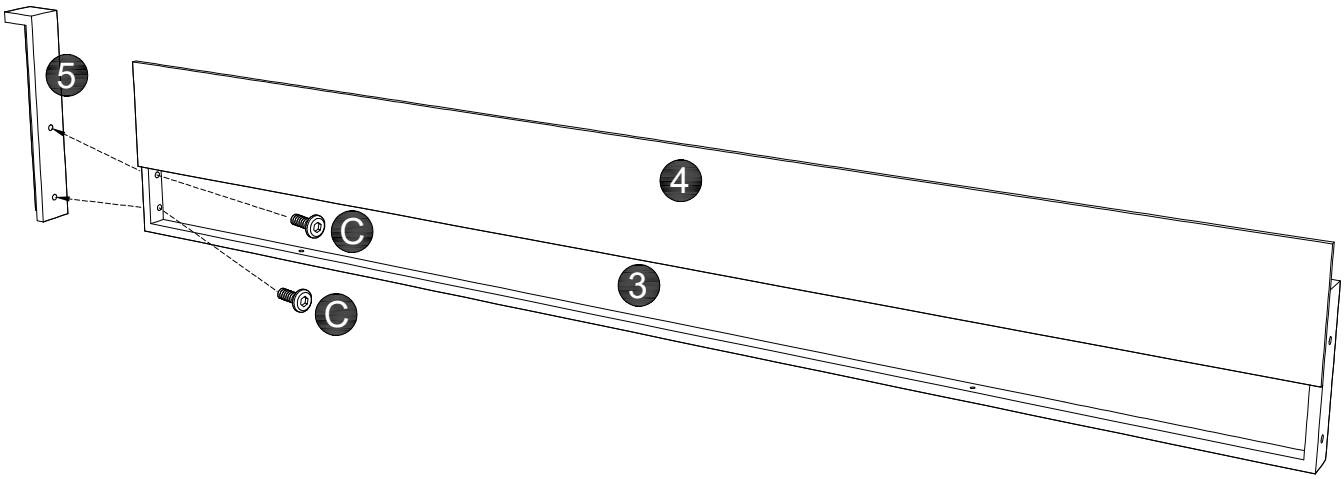

5

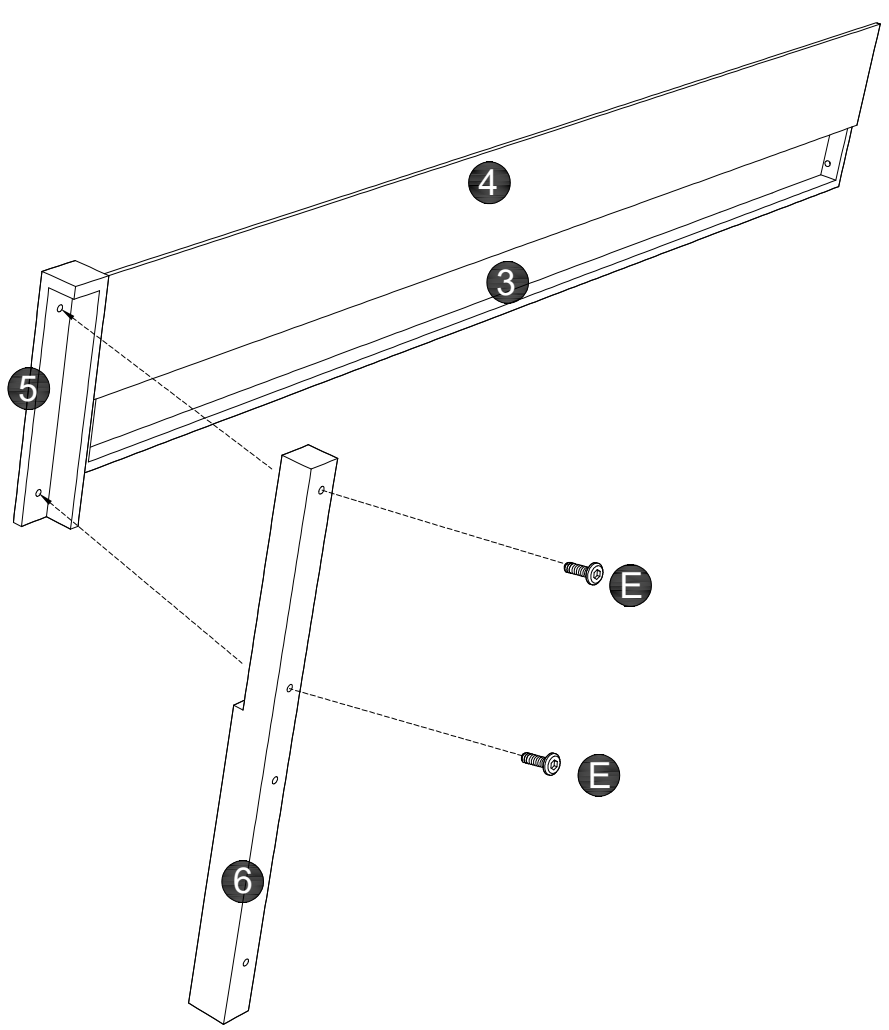

6

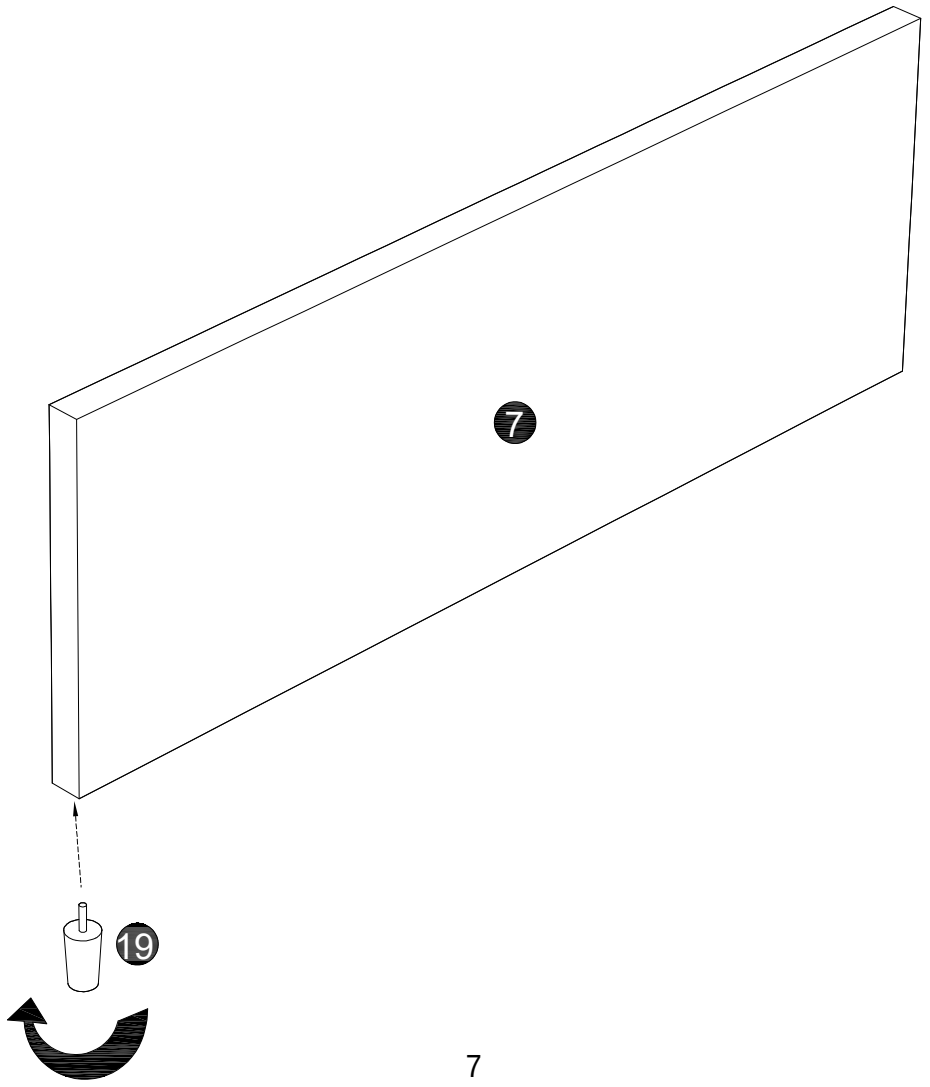

7

M8*18MM	M8*40MM
A×4PCS	D×5PCS

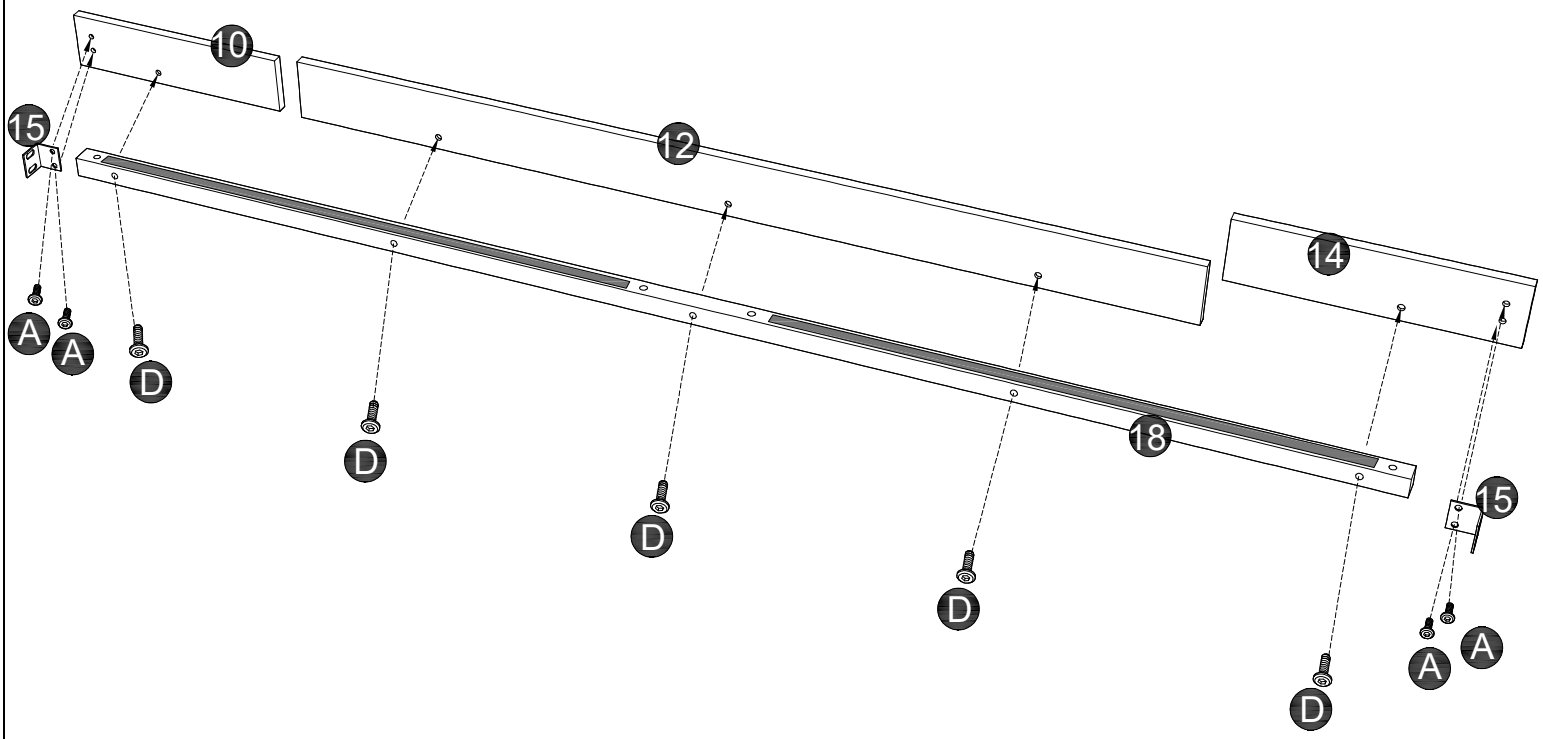

8

M6*14MM
F×4PCS

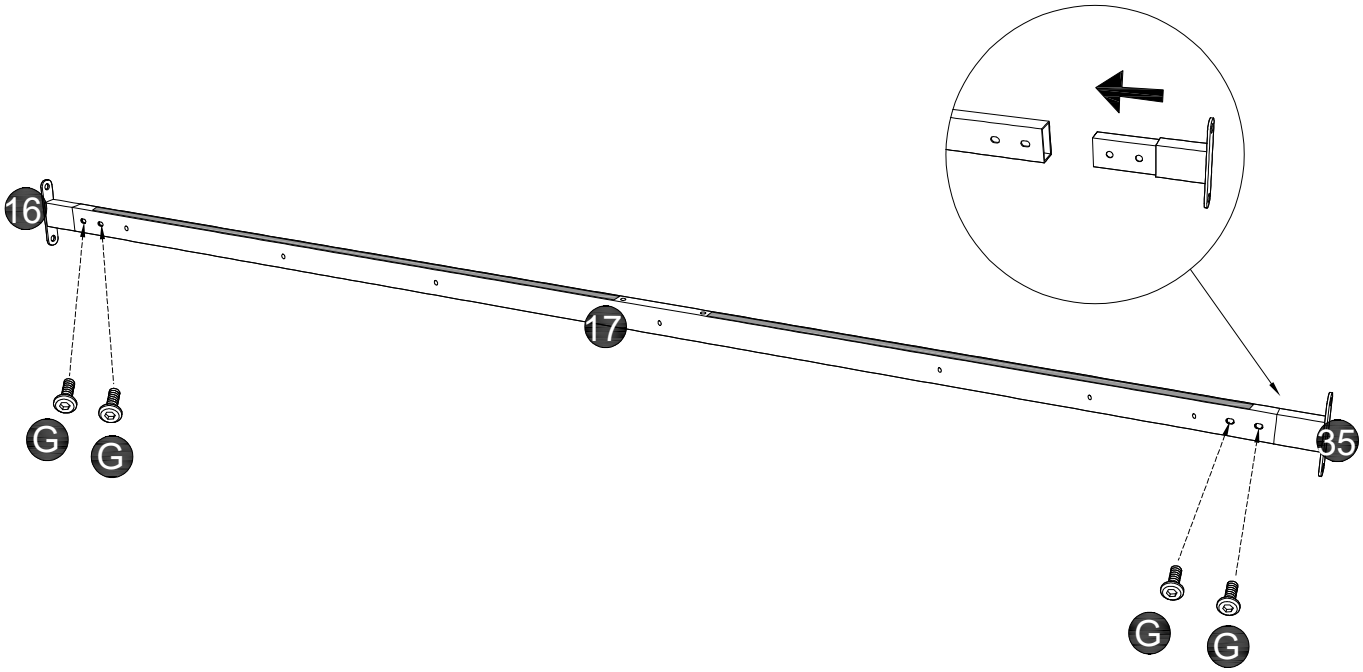

9

M8*18MM	M8*45MM	M8*75MM
A×8PCS	E×1PCS	F×3PCS

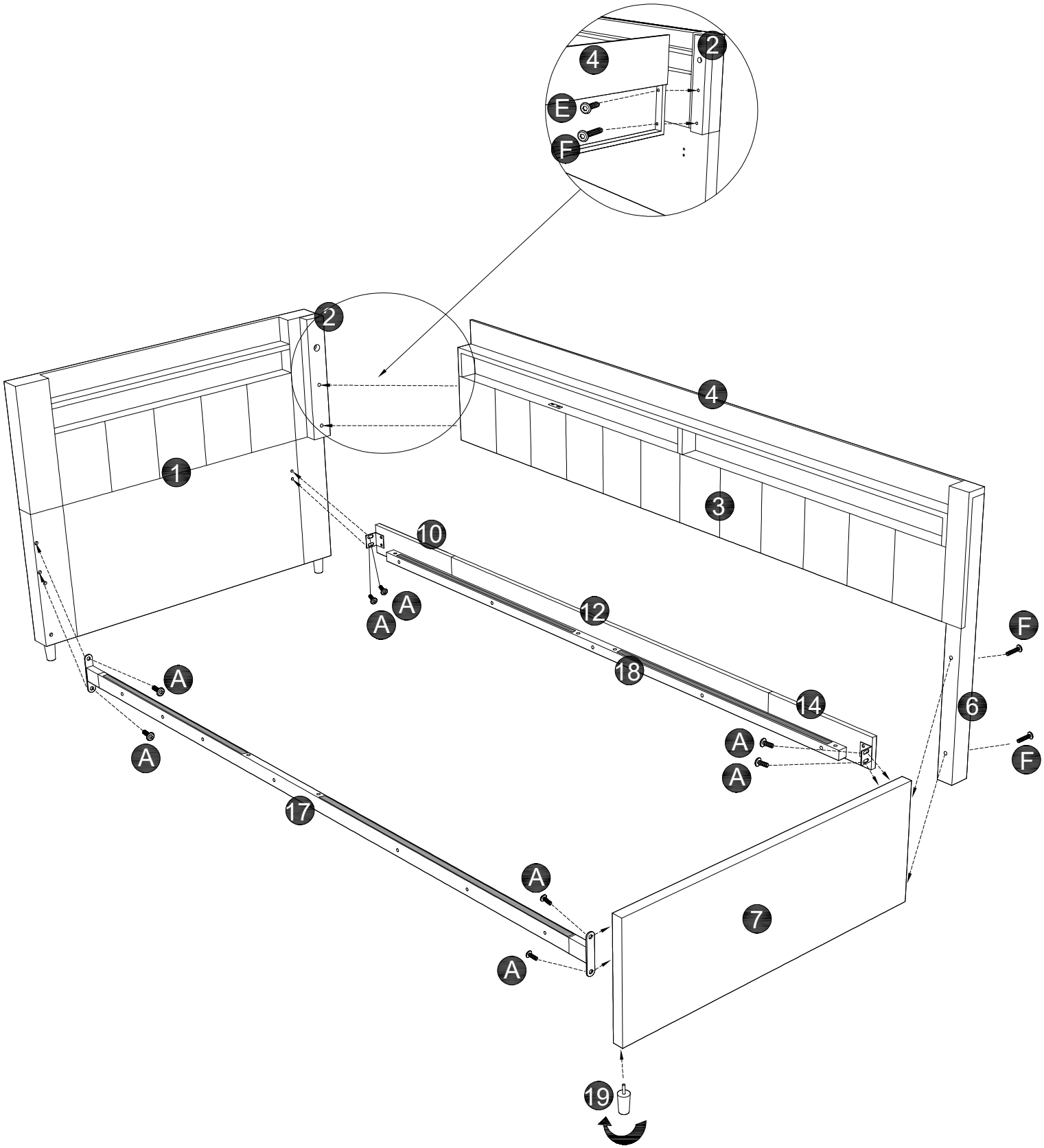

10

M8*45MM

E×4PCS

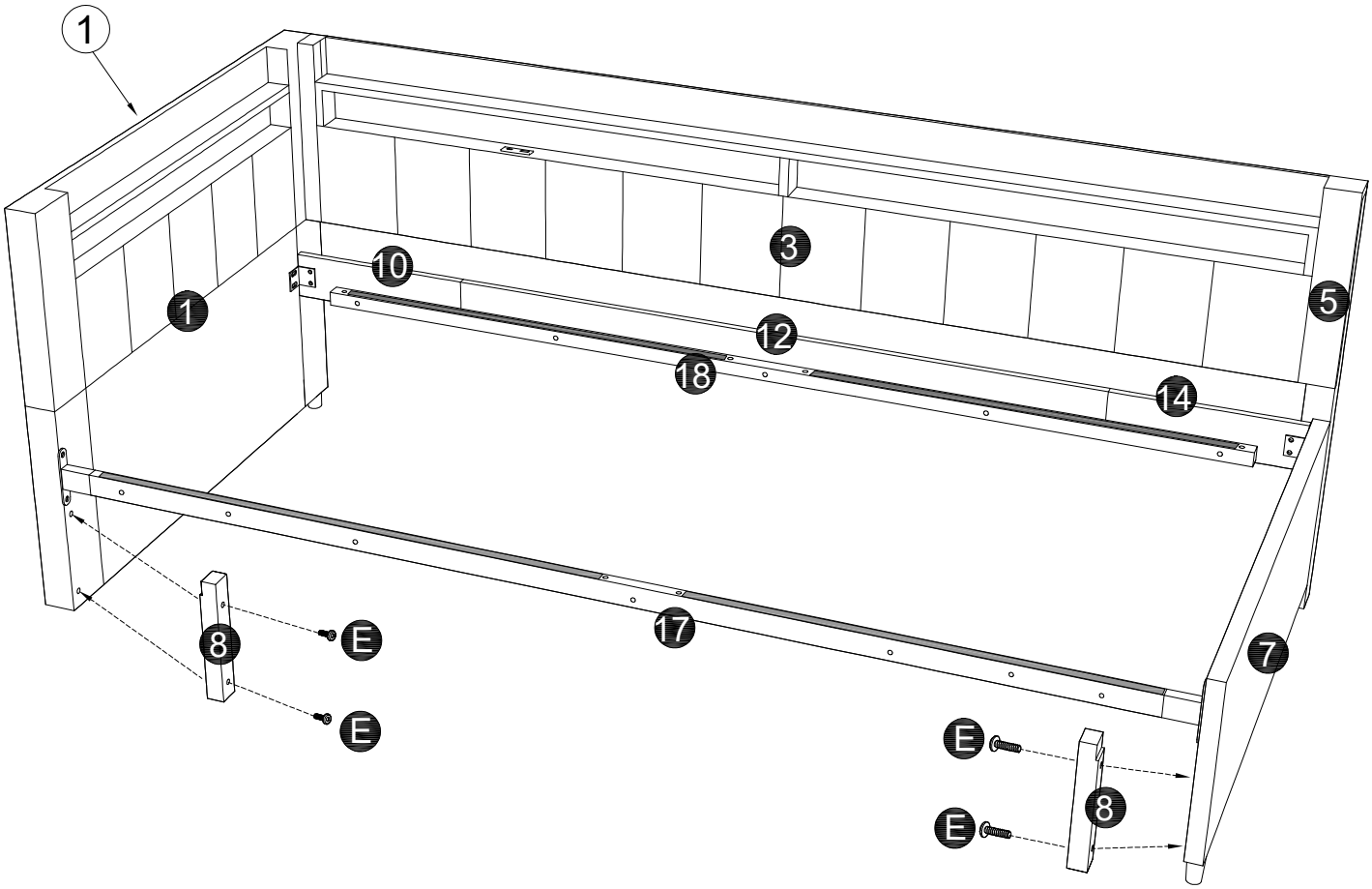

11

M8*45MM	φ3*35MM	M6
E×4PCS	J*2PCS	K*2PCS

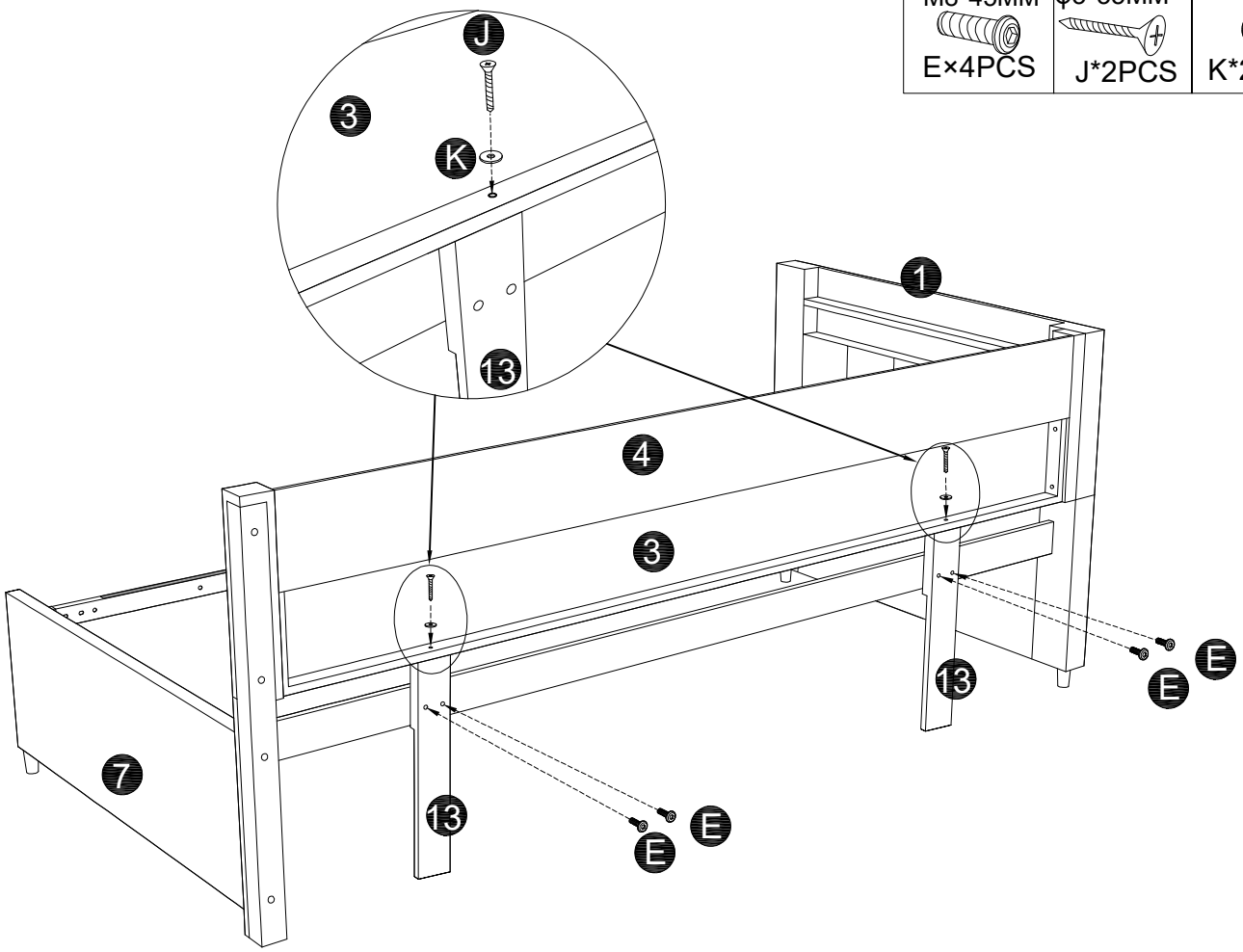

12

M6*30MM
H×7PCS

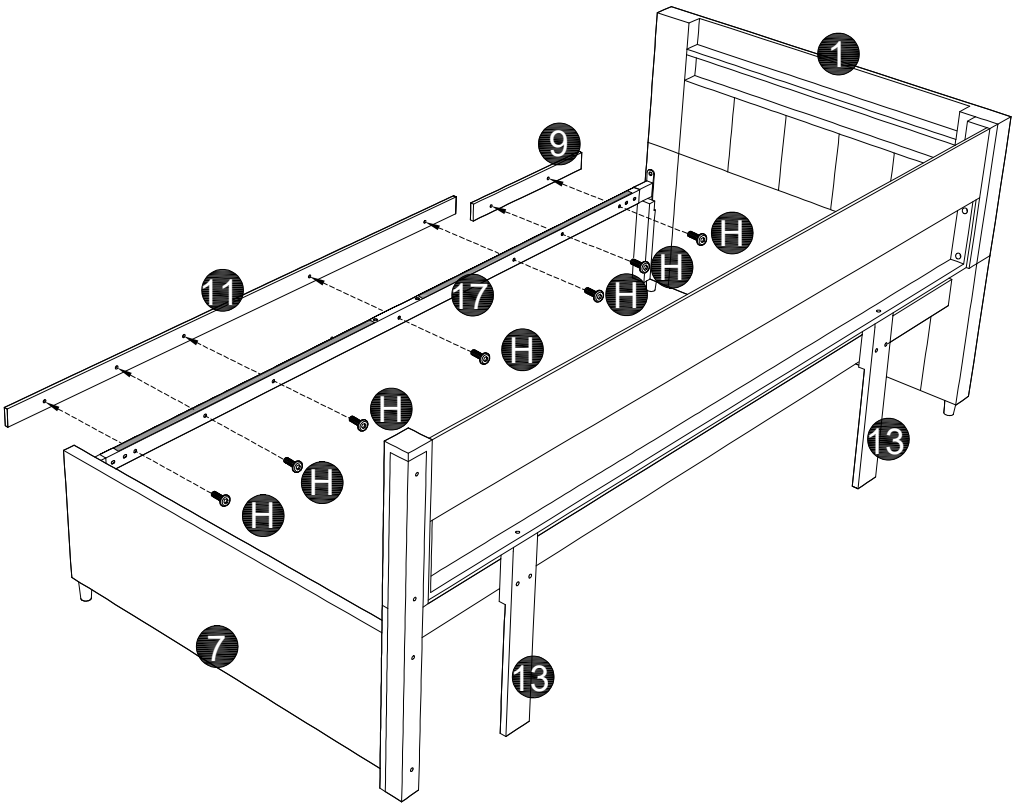

13

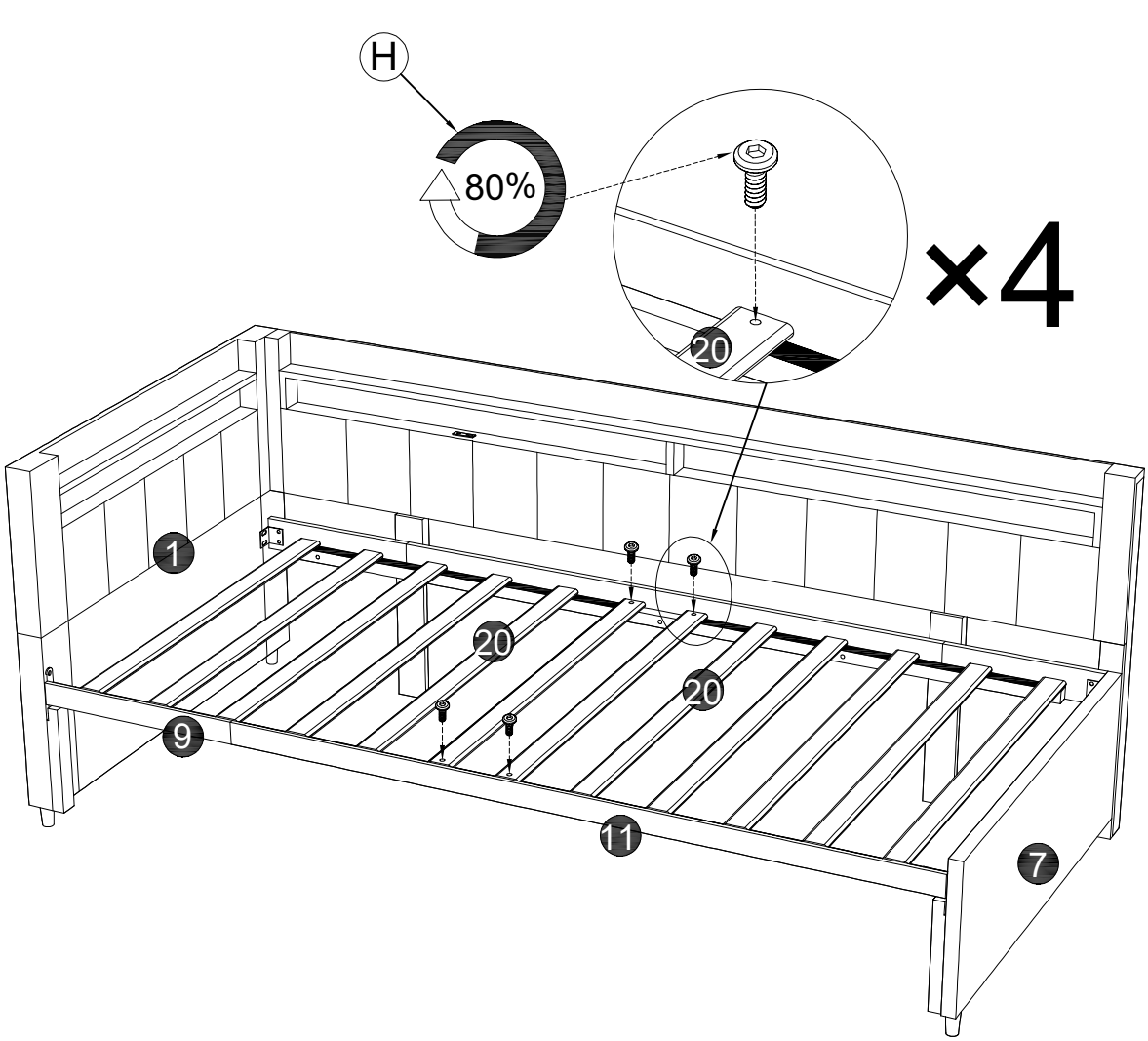

14

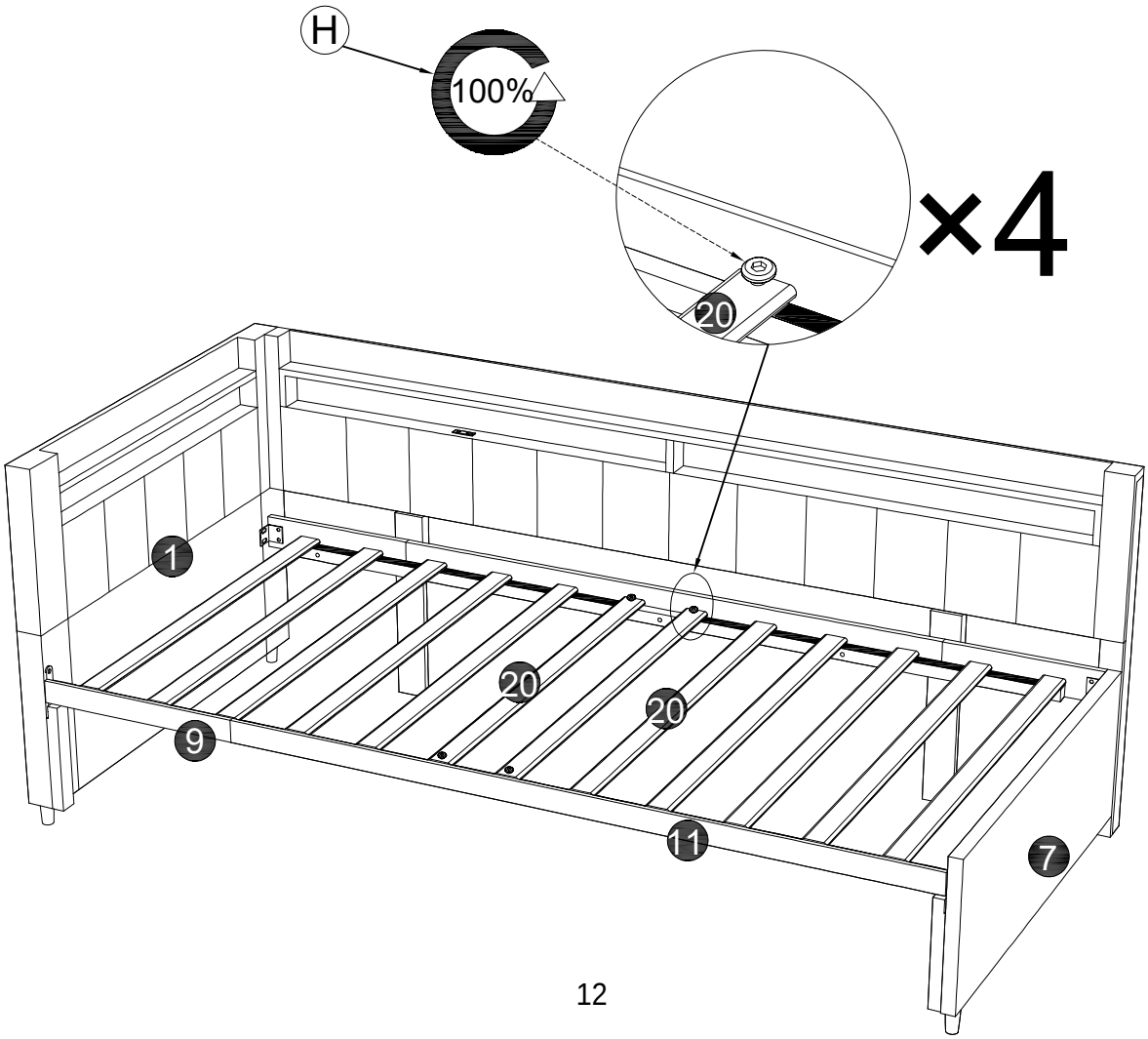

15

M8*18MM
A×8PCS

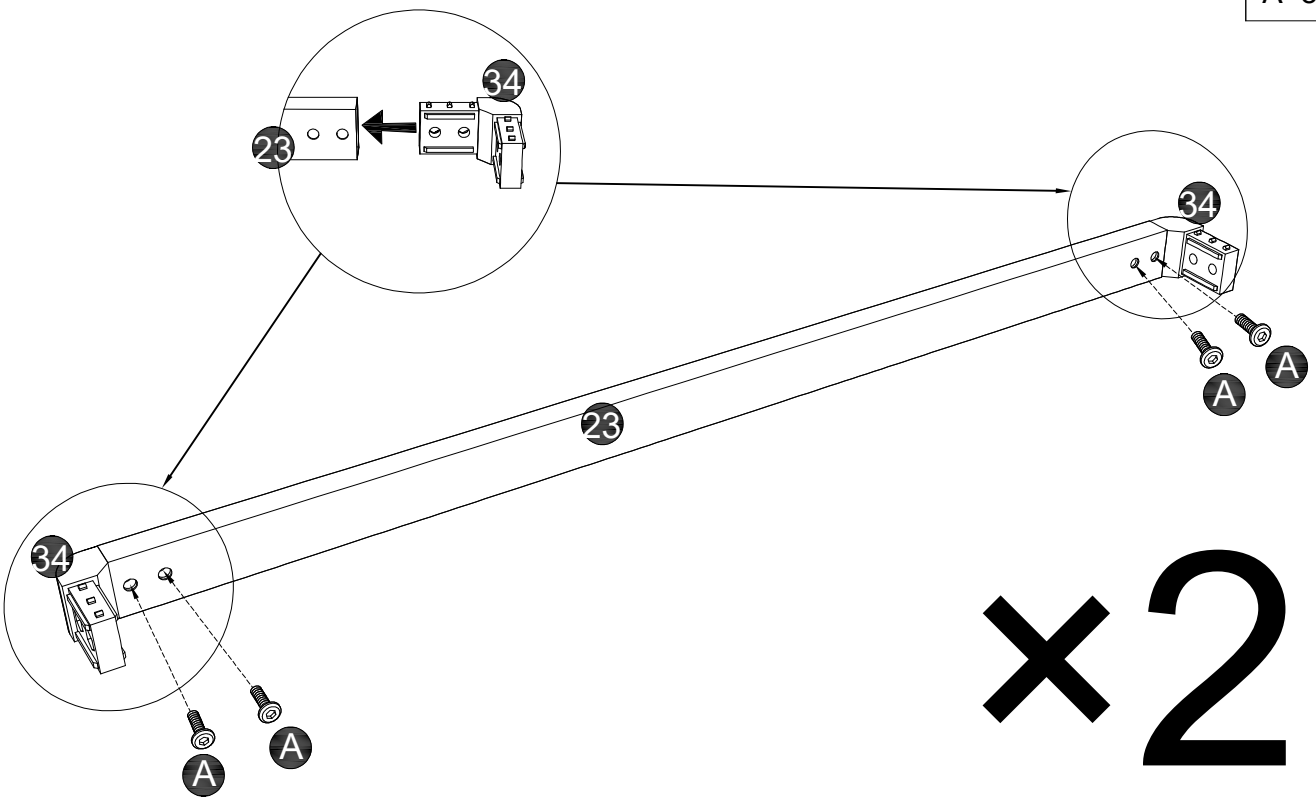

16

M8*18MM
A×8PCS

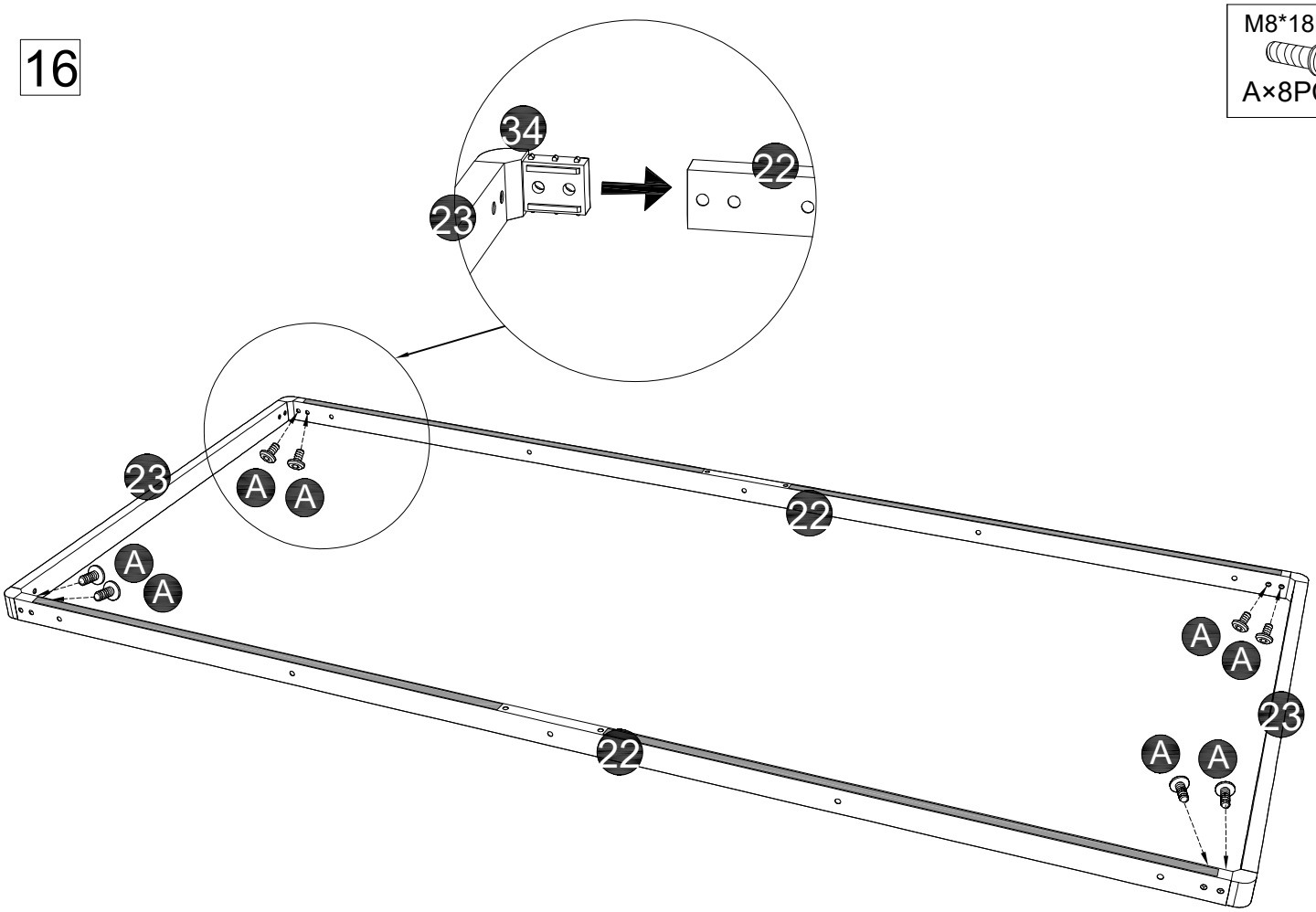

17

M6*30MM
H×5PCS

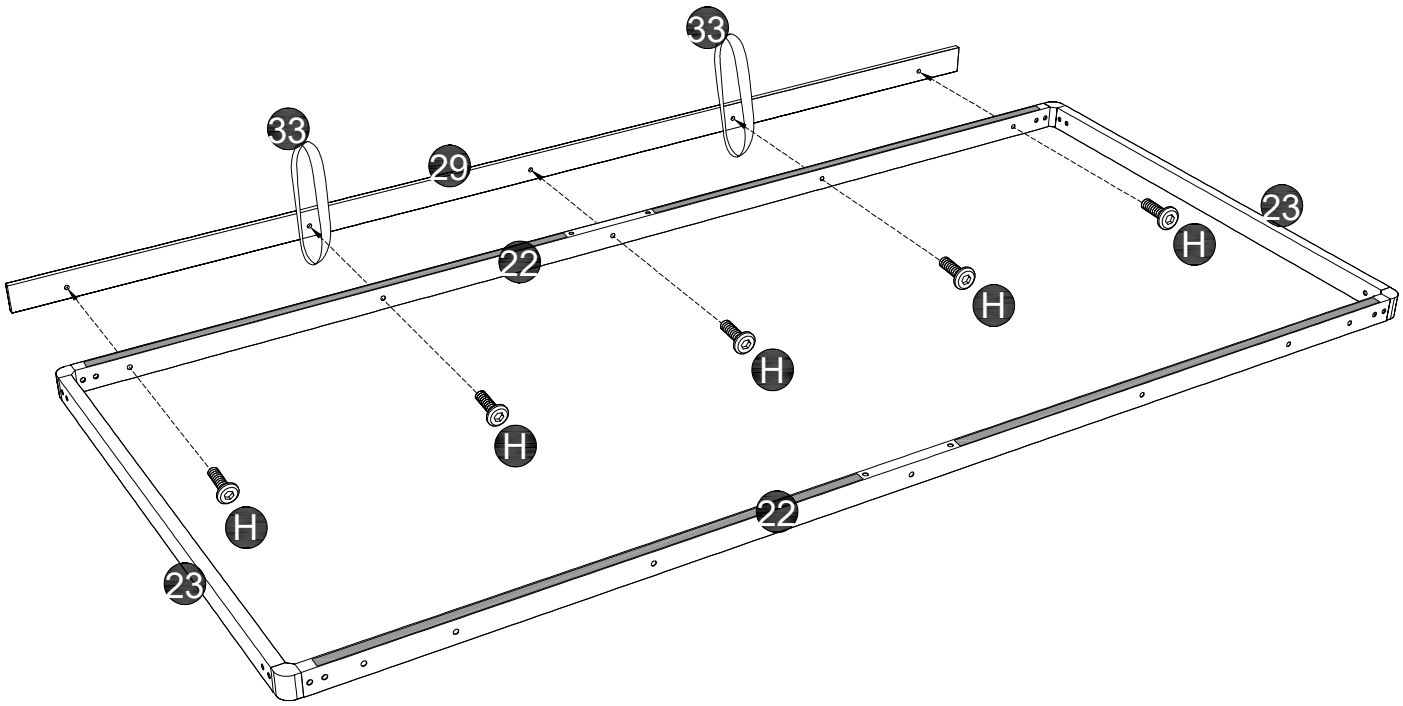

18

M8*18MM
A×2PCS

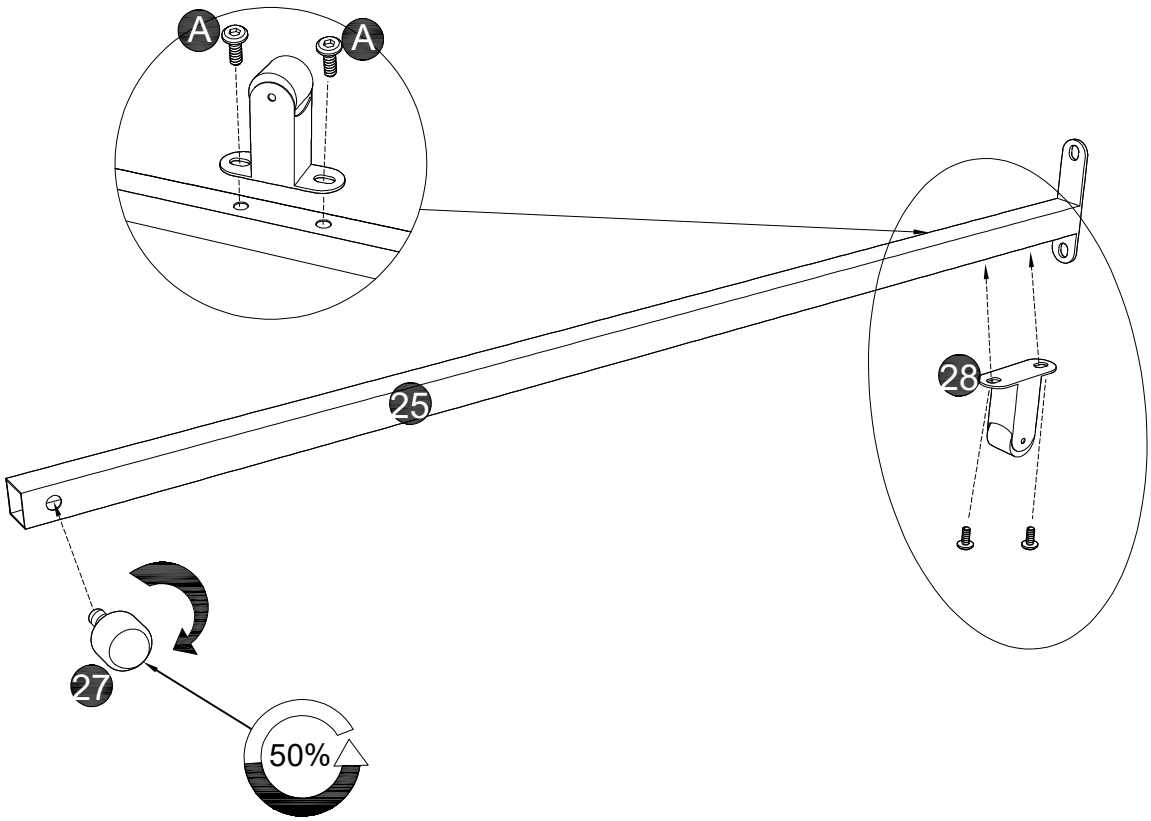

19

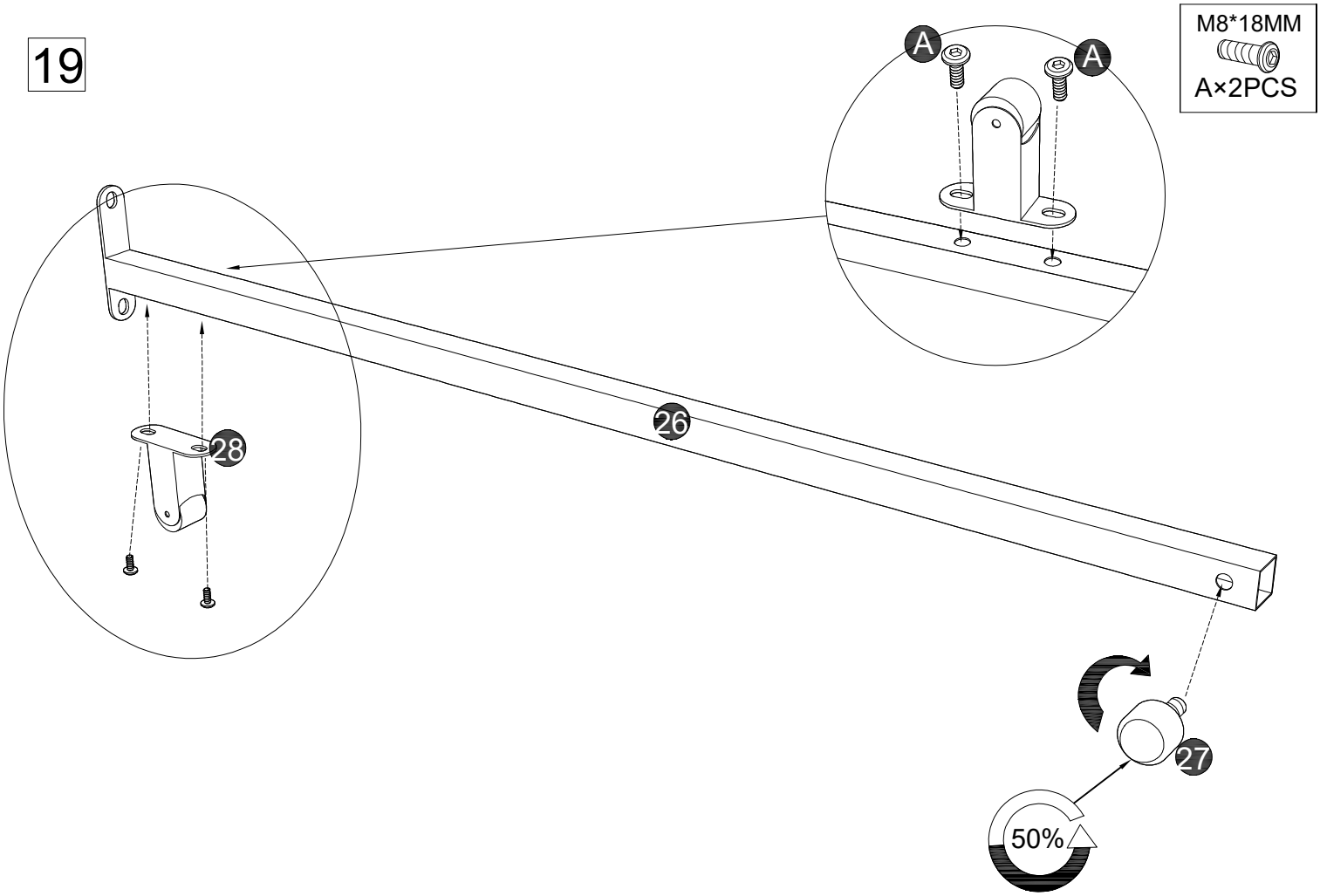
M8*18MM
A×2PCS
A
A
26
28
27
50%

20

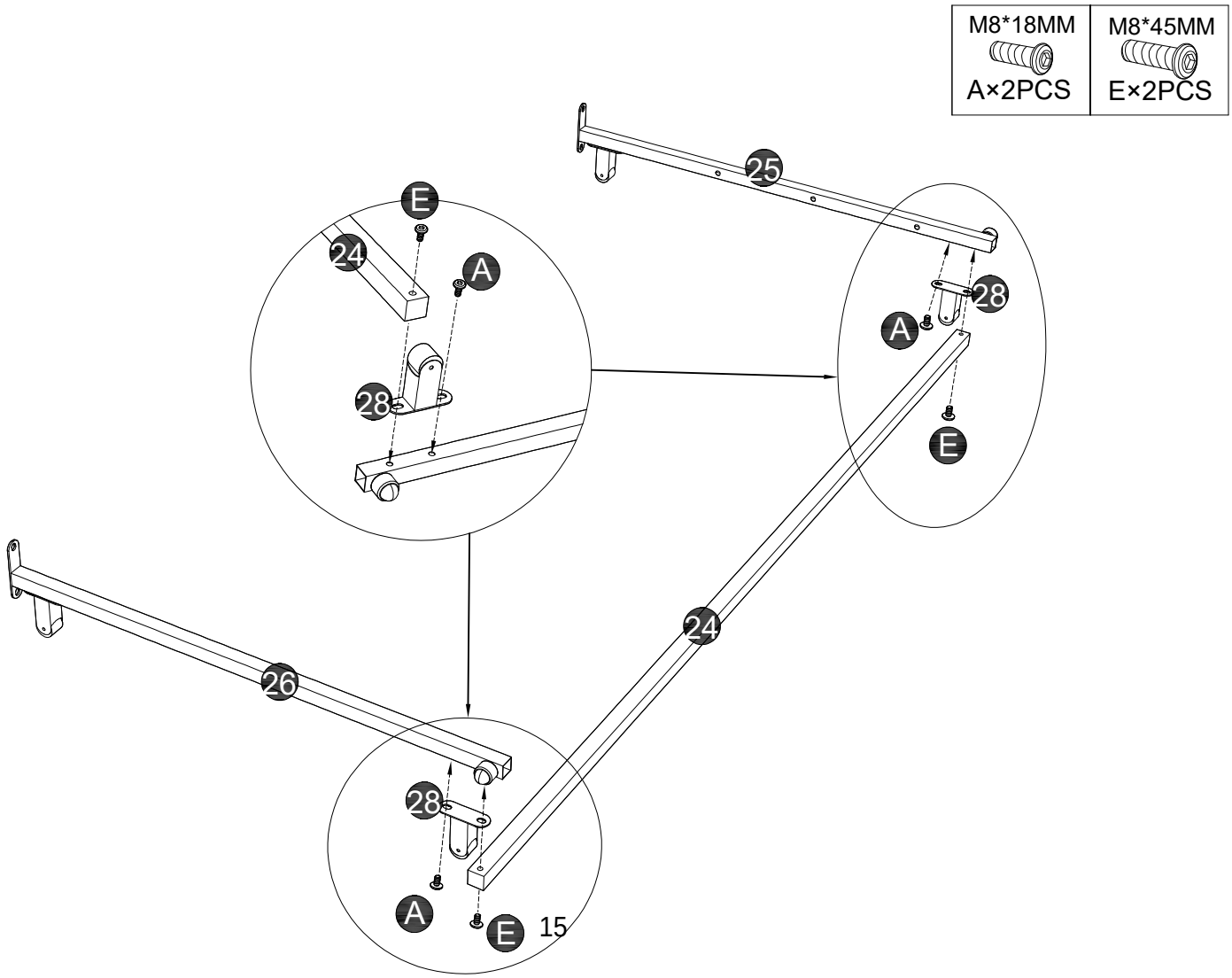
M8*18MM
A×2PCS
M8*45MM
E×2PCS
25
E
24
A
28
28
A
E
24
26
28
A
E

21

M8*30MM

B×4PCS

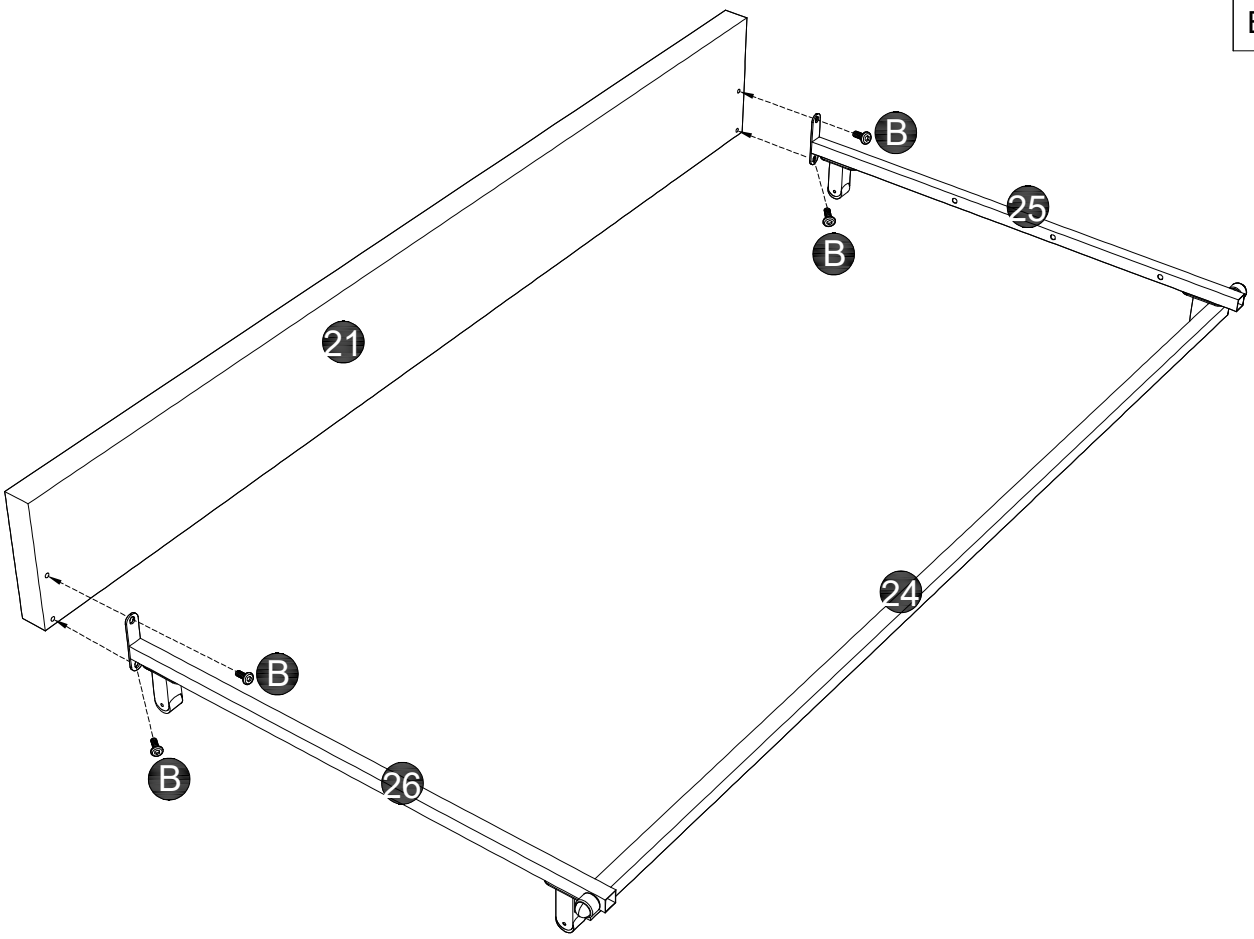

22

M8*18MM

A×6PCS

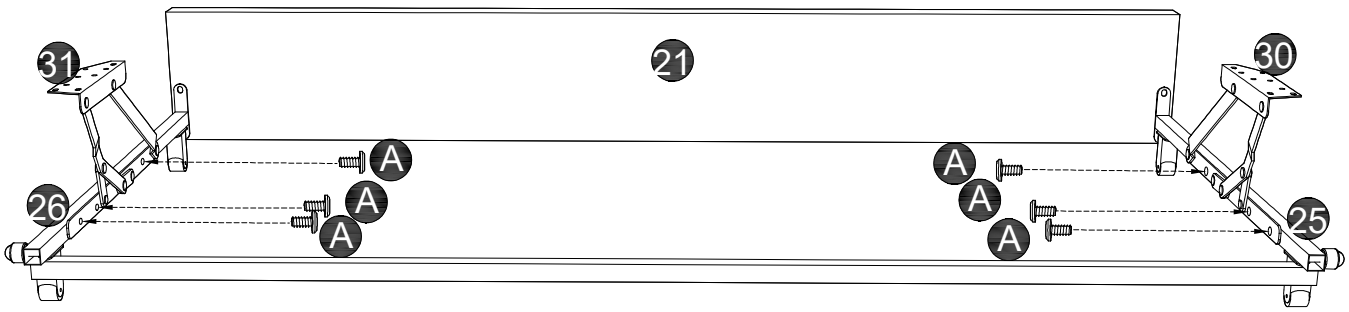

23

M6*14MM
G×4PCS

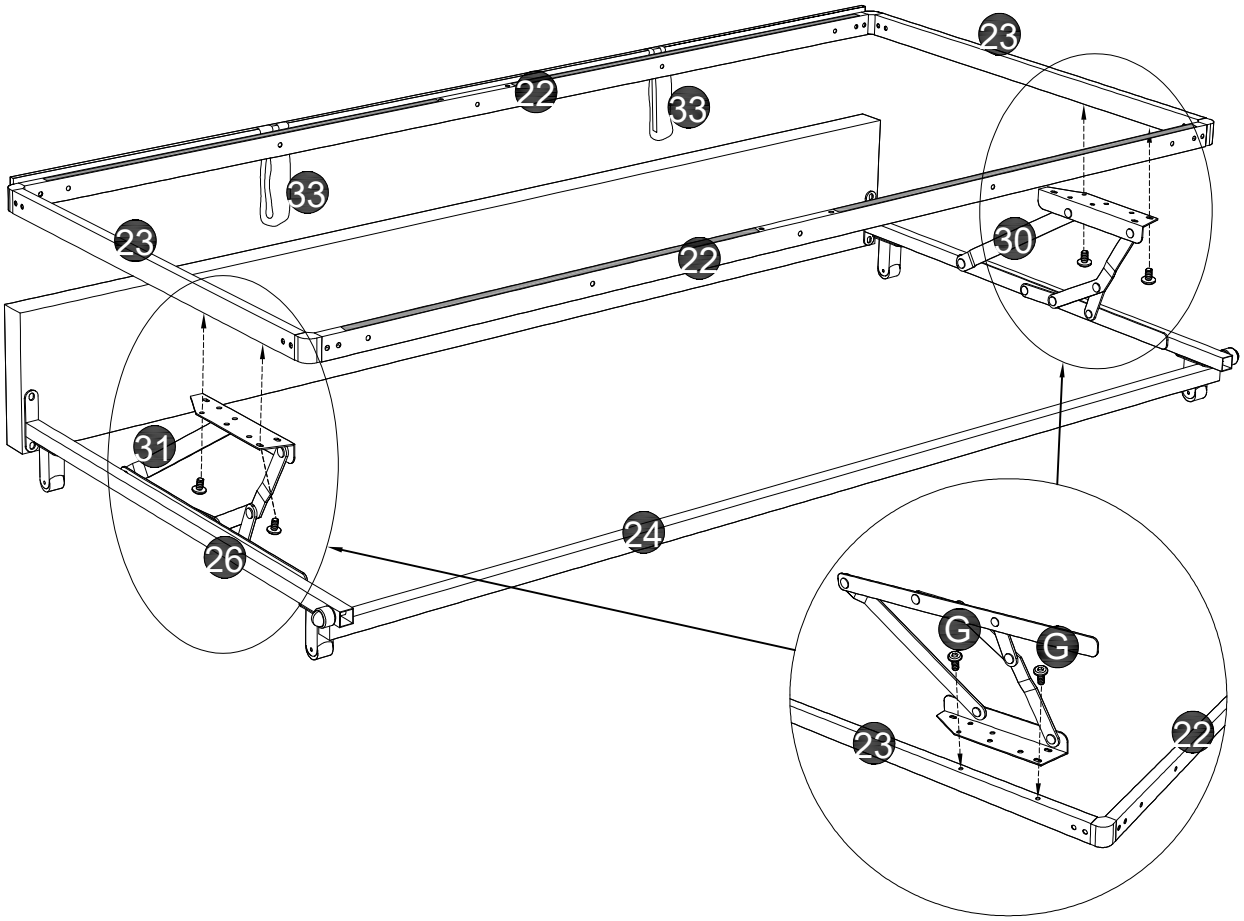

24

M6*30MM
H×4PCS

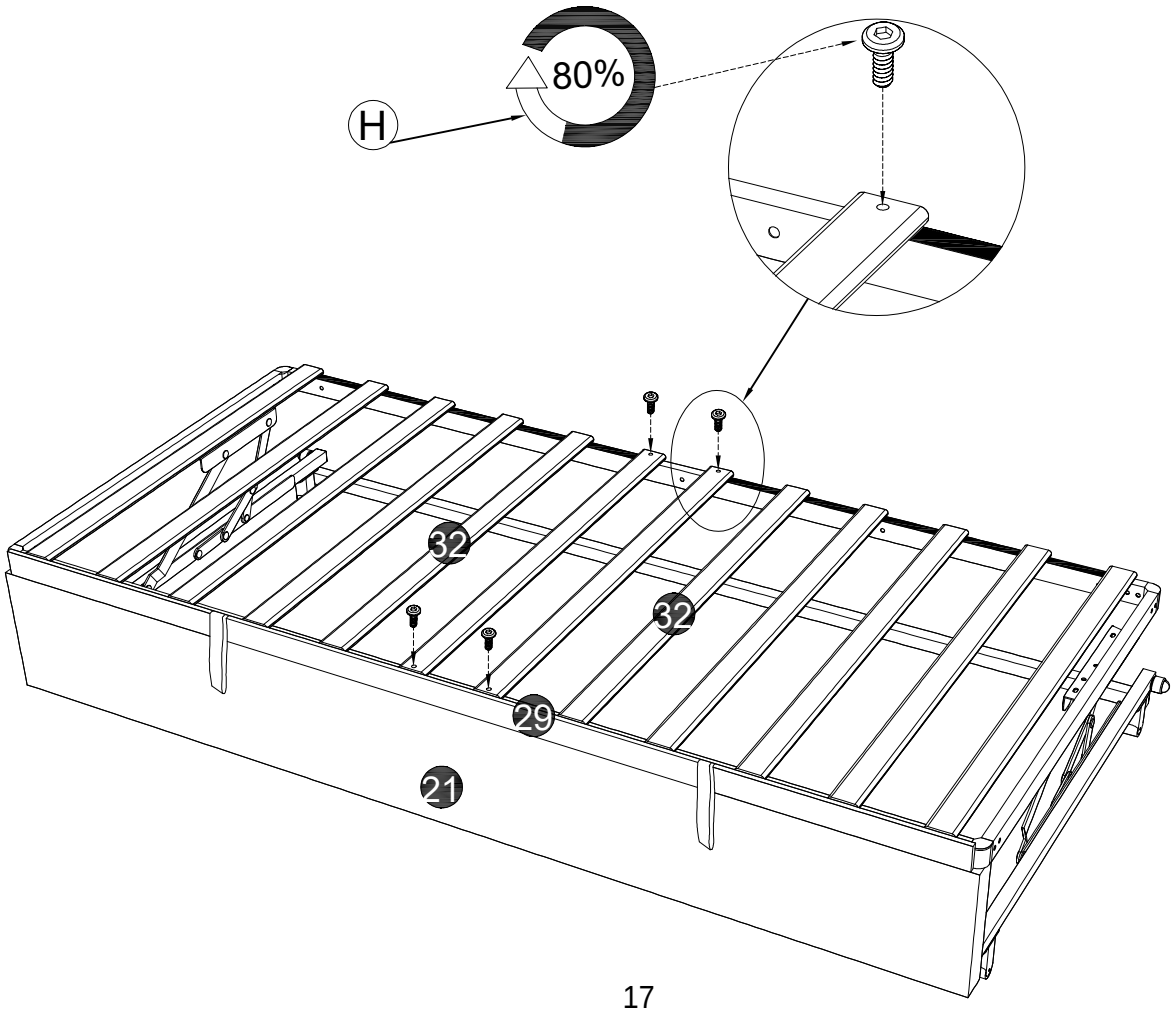

25

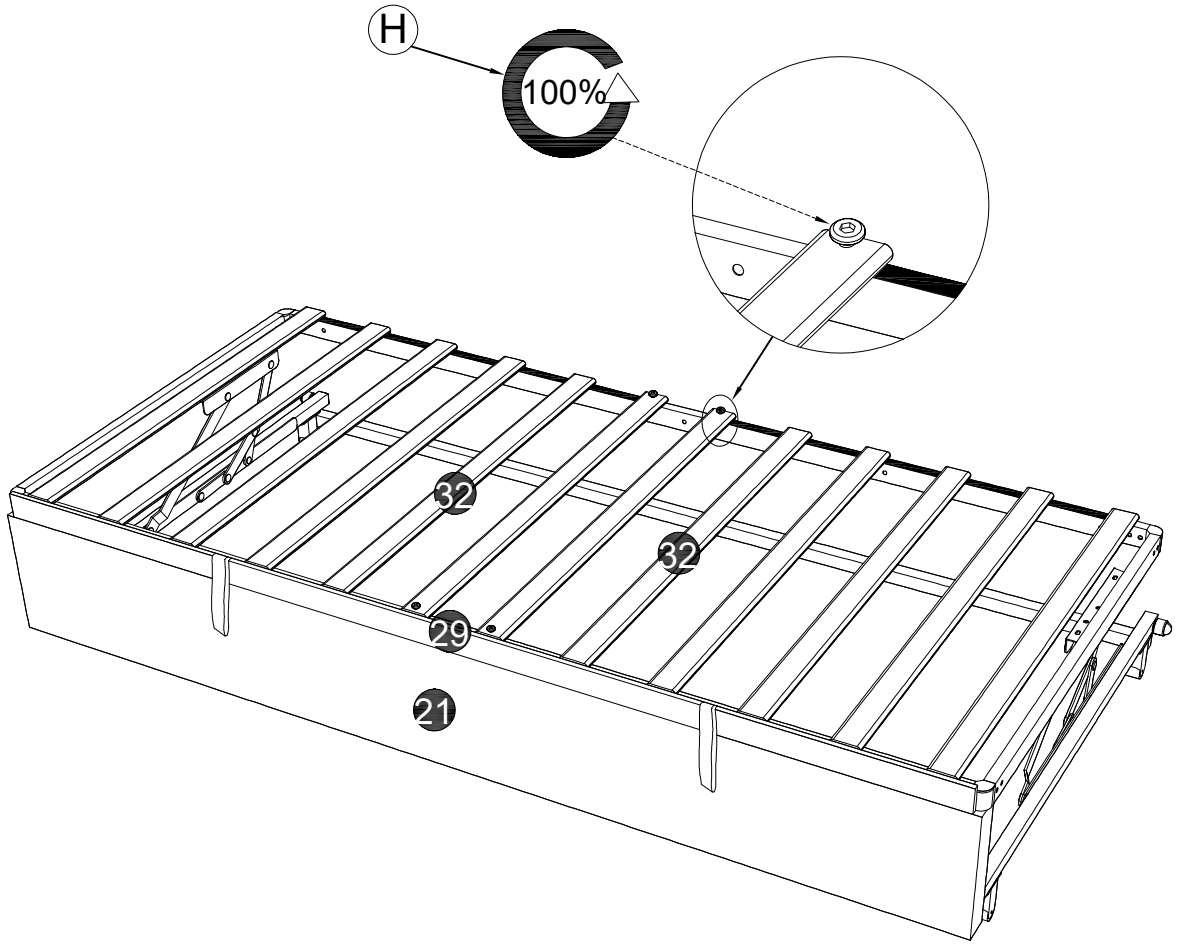

26

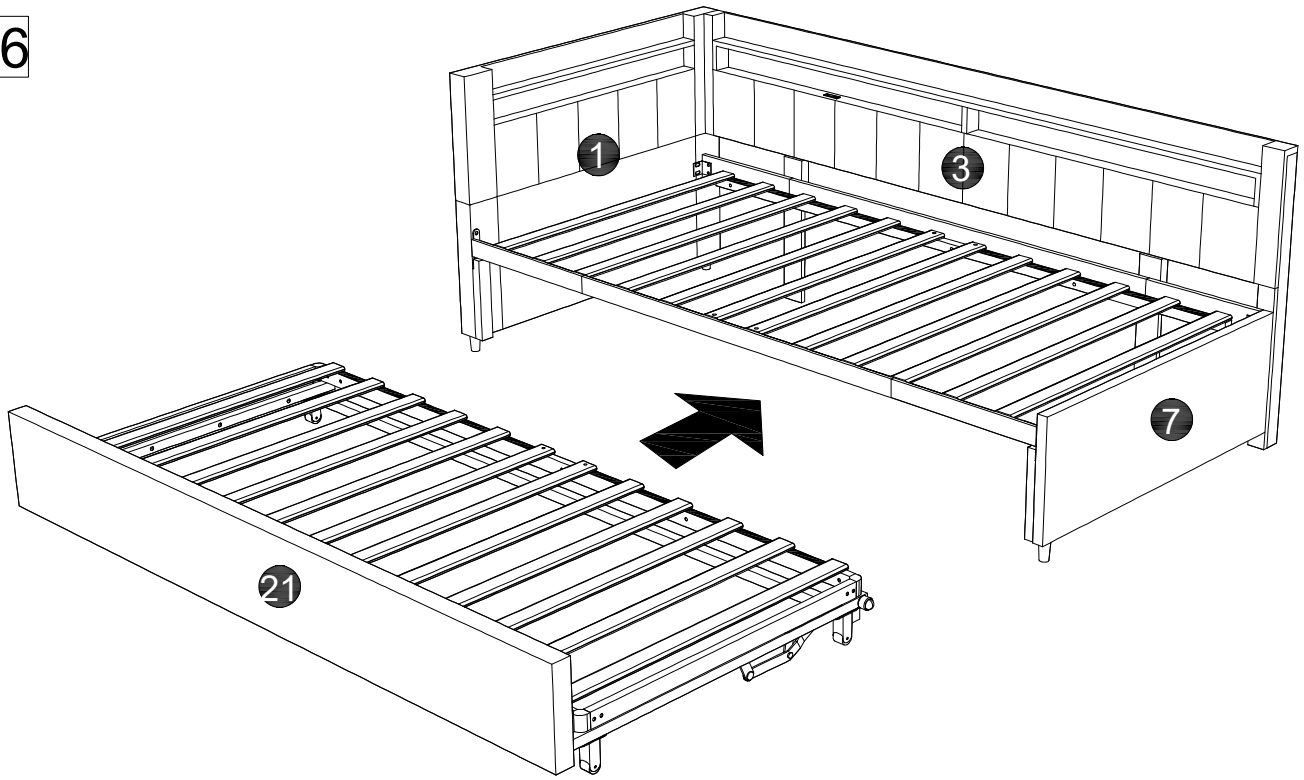

Lift the upper bed frame slightly, then push the lower bed frame in.

27

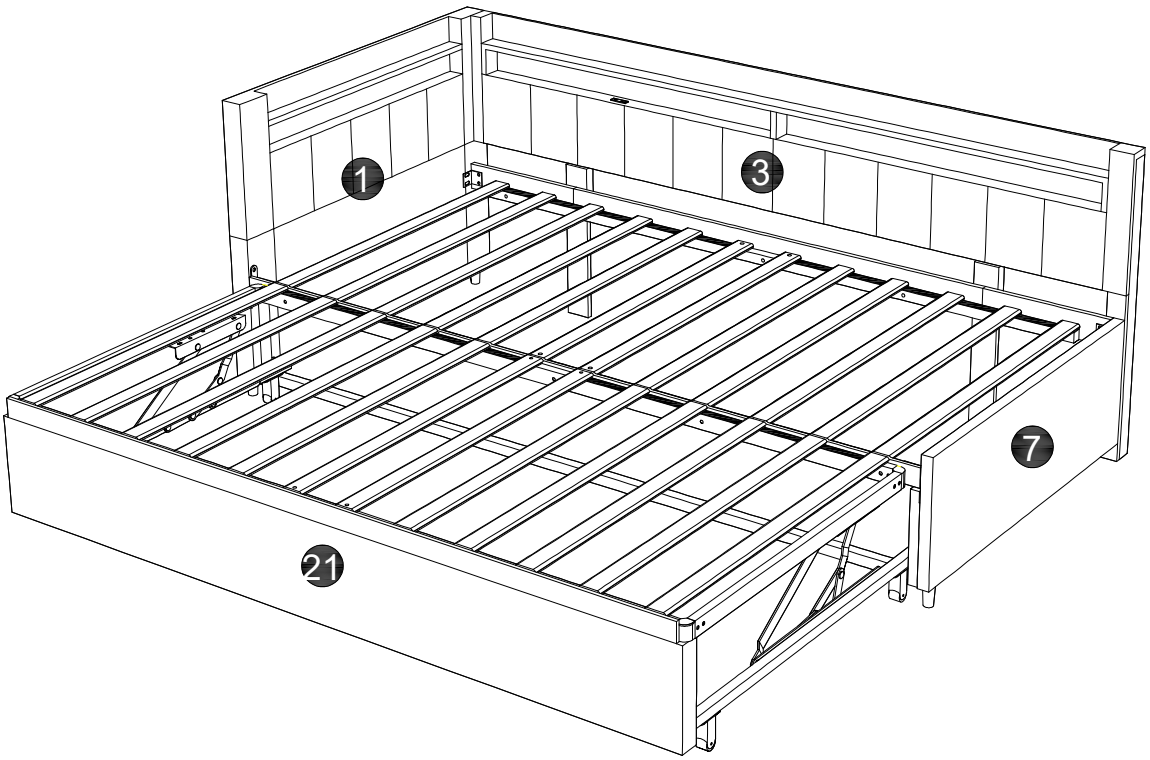

28

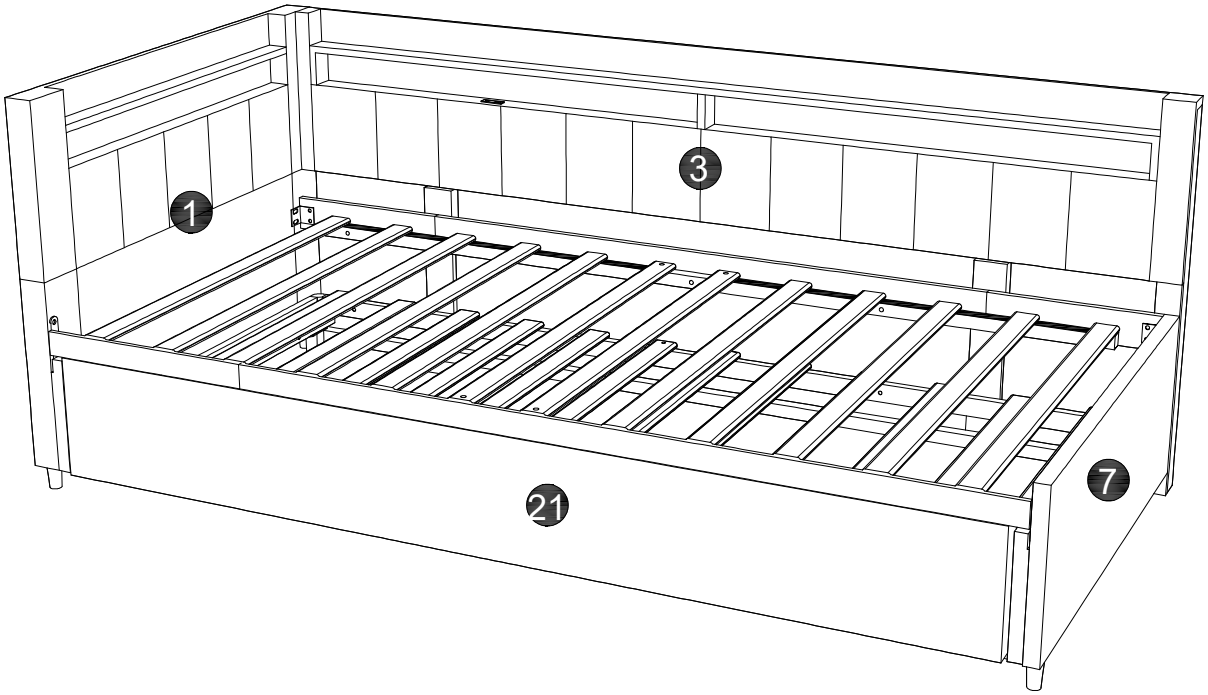

29

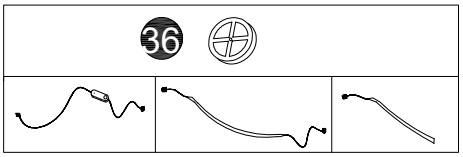

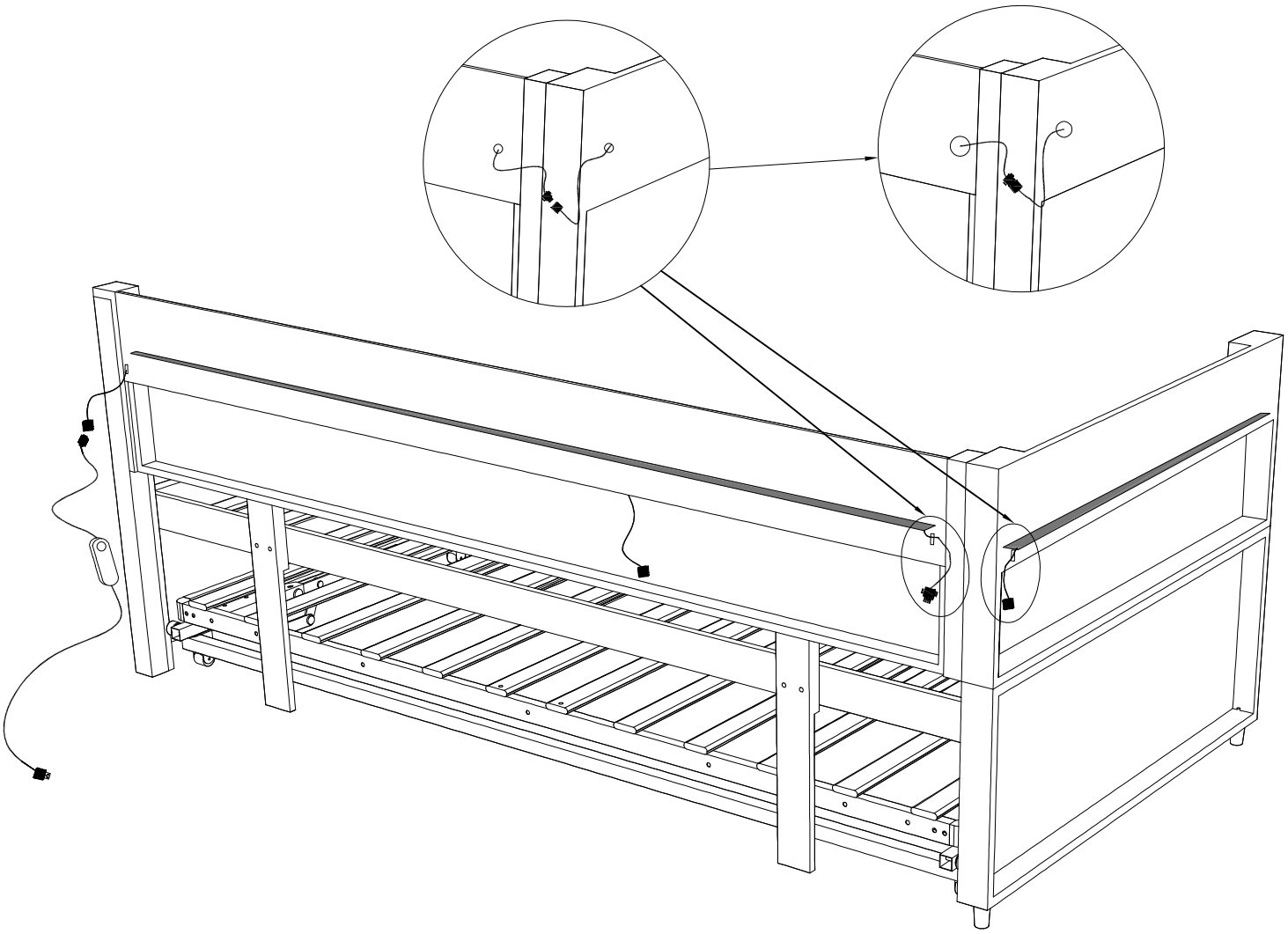

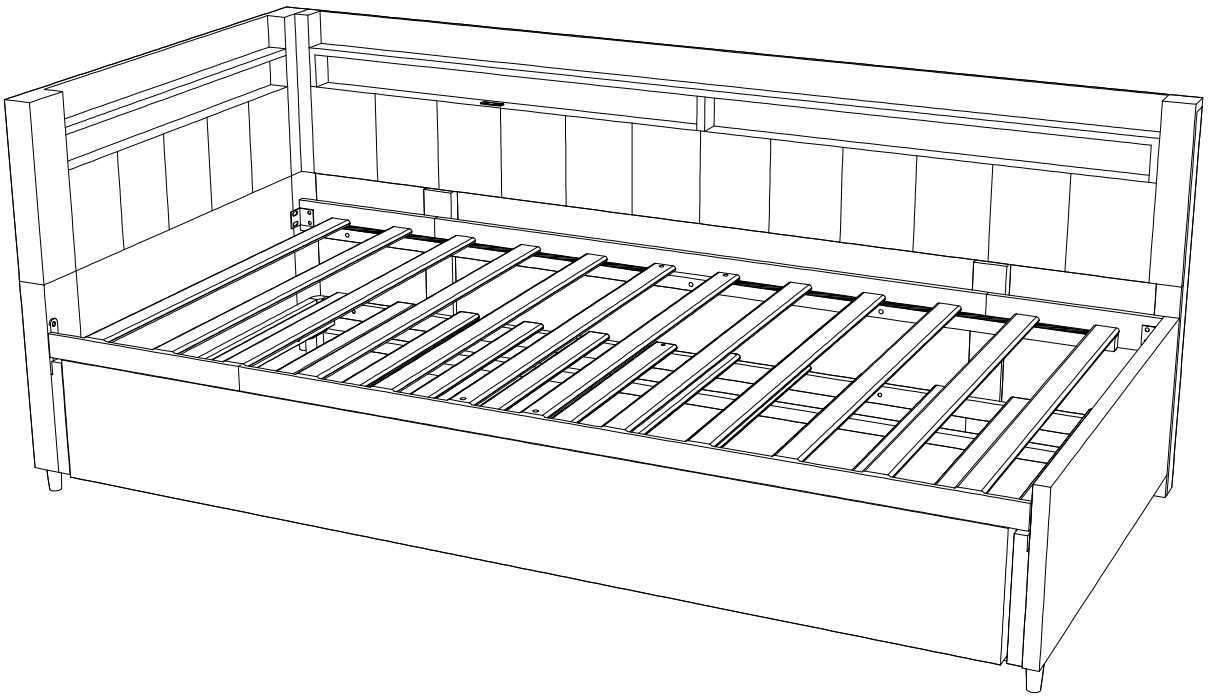

LotusLantern APP Manual

1. Software Overview

1.1 Overview

LotusLantern is a mobile APP to control LED strip by both Apple and Android phones.

The traditional control ways like infrared, 433MHz, 2.4GHz and others old wired ways will be replaced by mobile phone control way with convenient, powerful and scalable features.

Through this mobile APP，you can not only control the color, brightness and color temperature of the LED strips but also set up all kinds of fancy flash mode；Also this APP can change the light of the LED strip according to the rhythm of the music. This APP can set and control several LED strips through Bluetooth and the operation is very simple, easy to learn and easy to use.

1.2 Features

- Adjust color LED strips with 60,000 colors to change color and brightness and adjust monochrome LED stips to change brightness and color temperature
- Play music or turn on a sound playback device, you can let the light change the color and brightness with the rhythm of music, the music rhythm beautiful
- Inside multiple setting mode for color change and control LED strips without mobile
- Long distance control with omni-directional antenna, and many-to-many group control mode
- Once the connection is successful, connect automatically next time

1.3 Performance

LotusLantern APP is easy for use as well as great compatible for all kinds of smart phones; After the actual test of hundreds of mobile phones verification, the compatibility is above 95% of mobile phones in the market. APP is small and convenient, it consumes less system resources, so the requirements of the mobile configuration are low. Control delay is small, the operation feel good, light control is smooth with people's visual sense.

2. Operating Environment

This APP program requires phones of system above Andriod 4.3 and iOS 8.0. Mobile phone configuration is not limited.

3. Instuctions

Note: Android version and iOS version download and use the same method, here in the Android version as an example.

3.1 APP Download

- Scan the QR code

iOS and Android systems can download the "LotusLantern" APP by scanning the QR code. Open the browser or other tools with "Scan QR code" function, scan the "LotusLantern" QR code as below:

3.2 App Operation

(1) Click on the LotusLantern APP icon, enter the APP page:

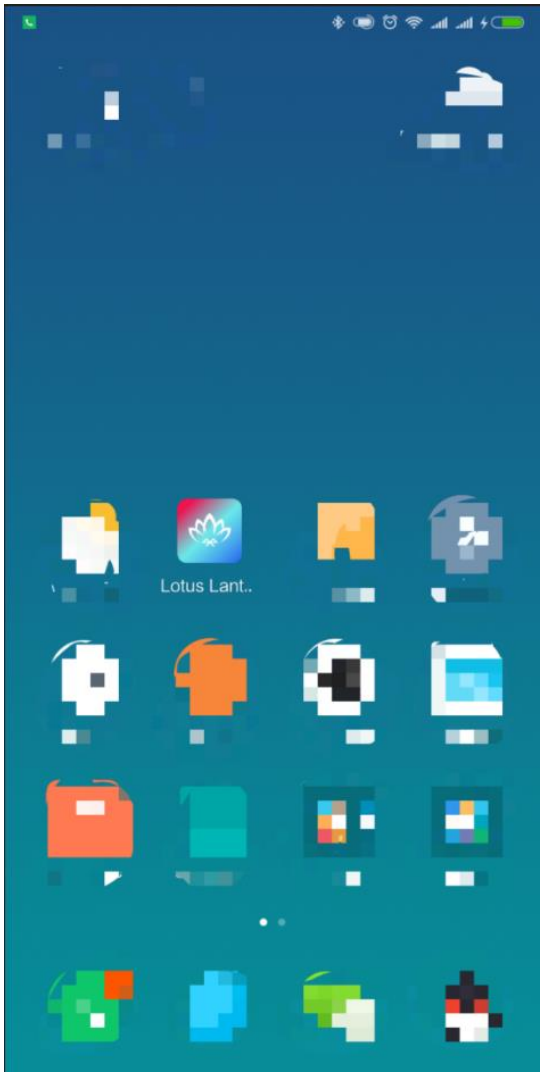

(2) After entering the APP interface, if Bluetooth is not enabled, "an application wants to enable the Bluetooth function of this device." Click [Allow]

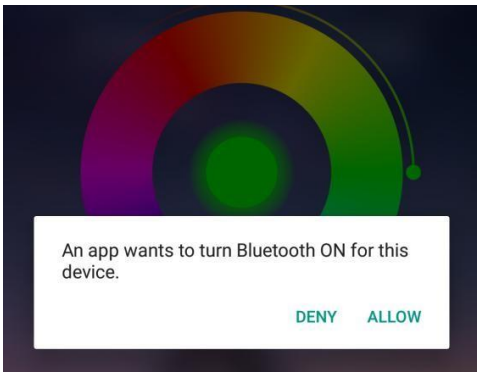

(3) switch to color and brightness interface:

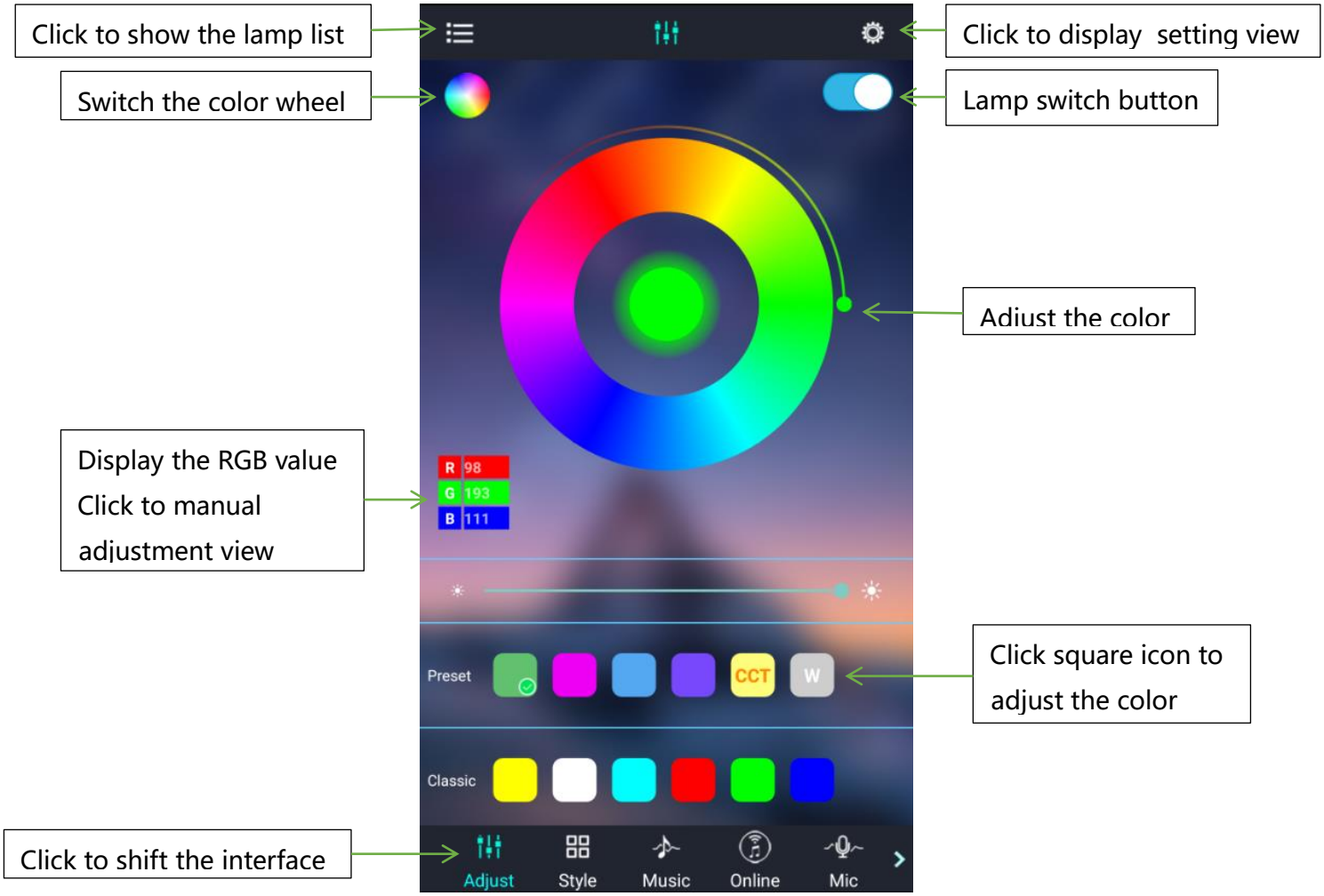

(4) click to show the lamp list, view lamp list:

Bluetooth auto connect after search for devices

Lamp list

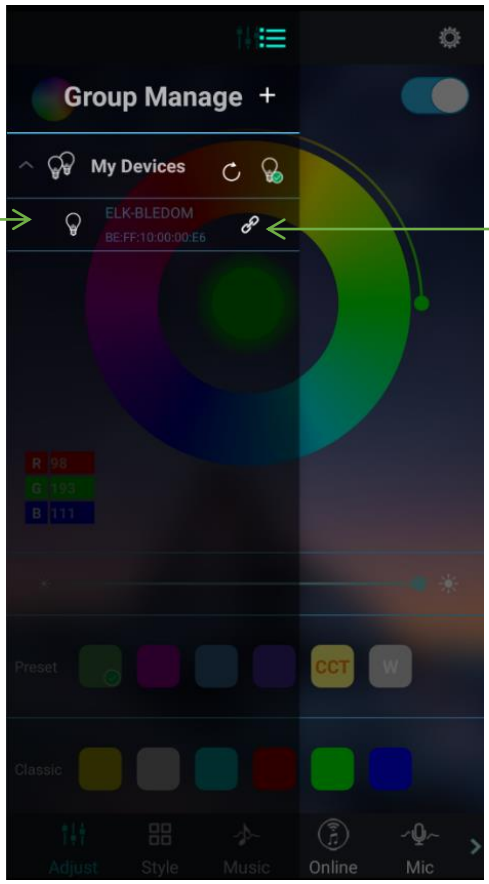

Status of device connection

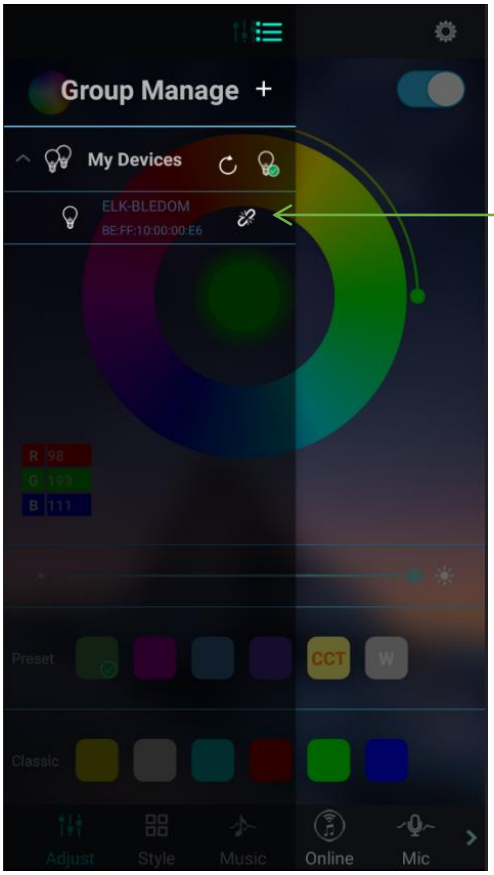

Status of device connection

(5) Click to RGB manual adjustment view:

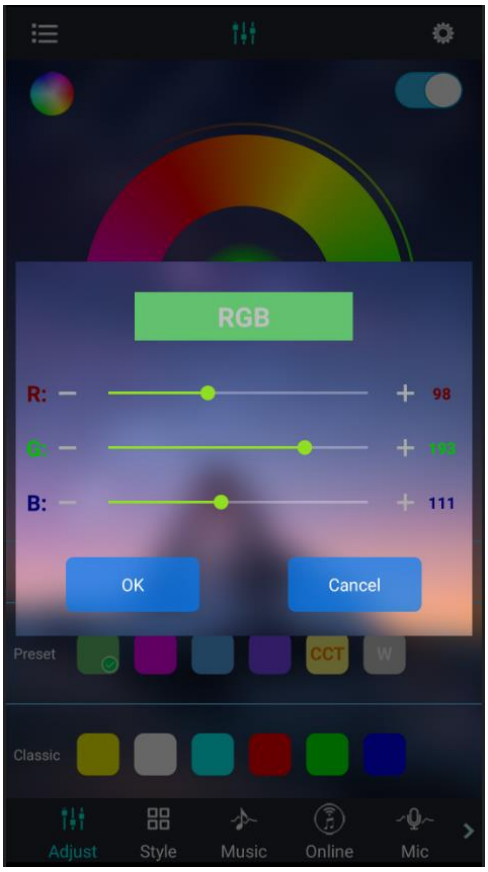

(6) switch to the mode interface:

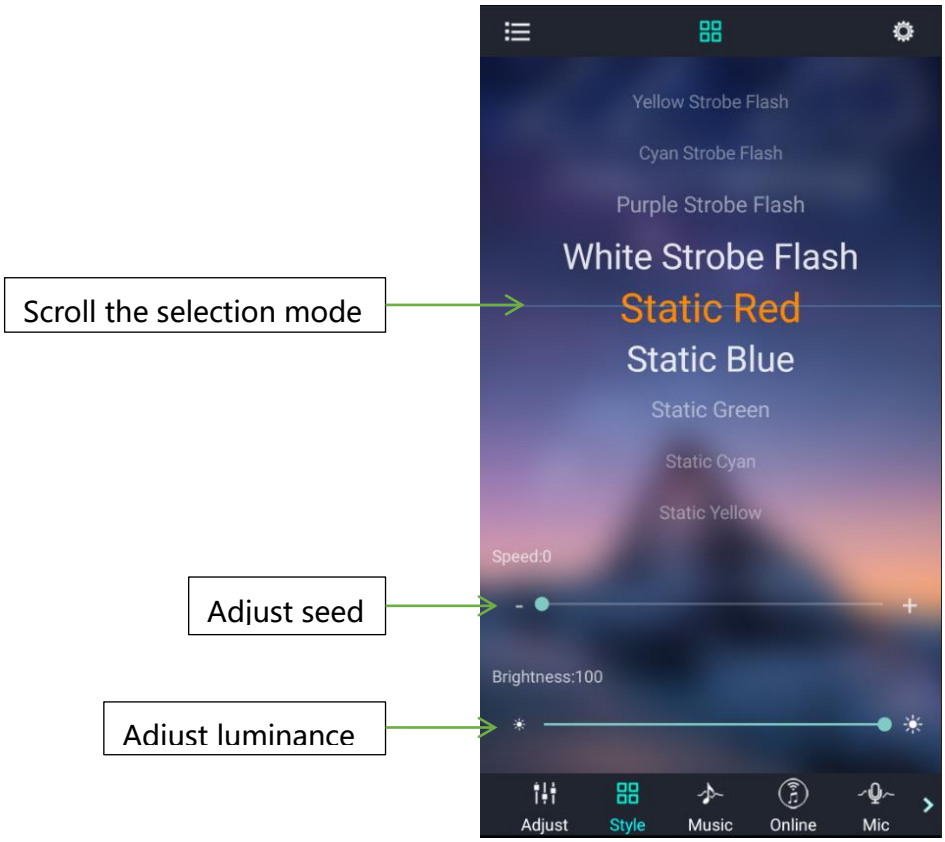

(7) switch to the music rhythm interface:

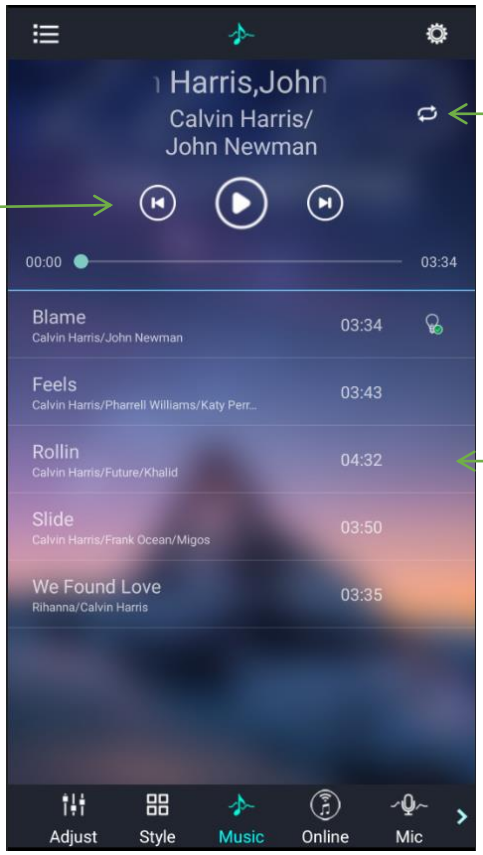

Recycle mode

Previous song, Pause/Play, Next song

Music List

(8) Switch to the online music interface:

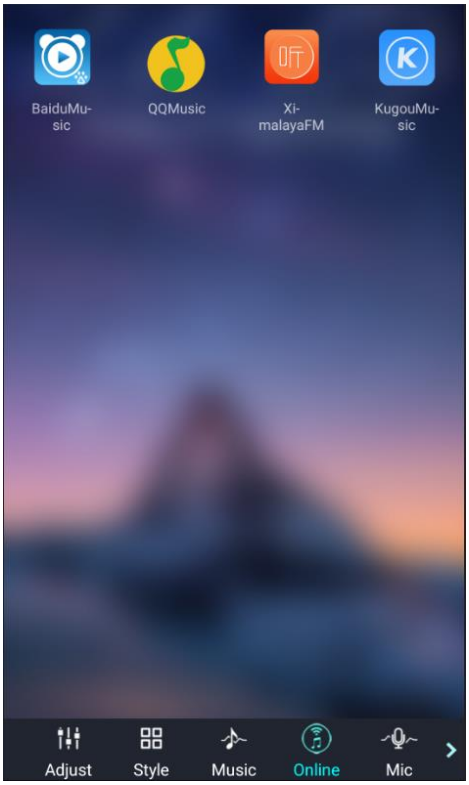

(9) Switch to the microphone rhythm interface:

Music rhythm through cell phone microphone

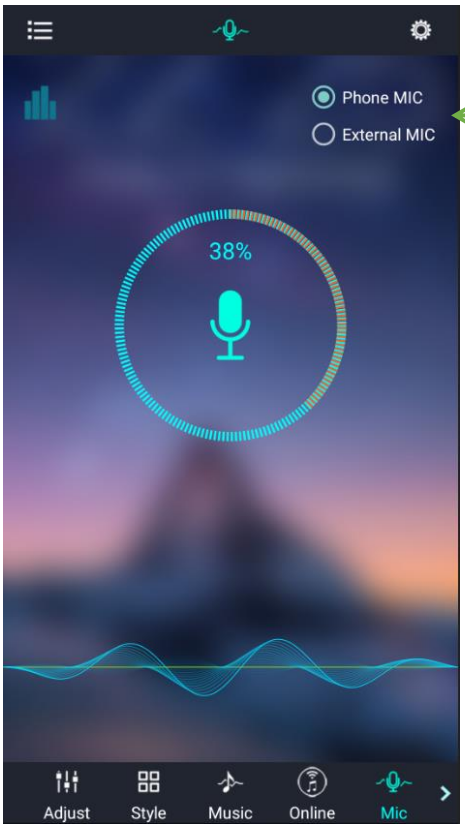

Switch phone microphone and external microphone

Music rhythm through the microphone on the product

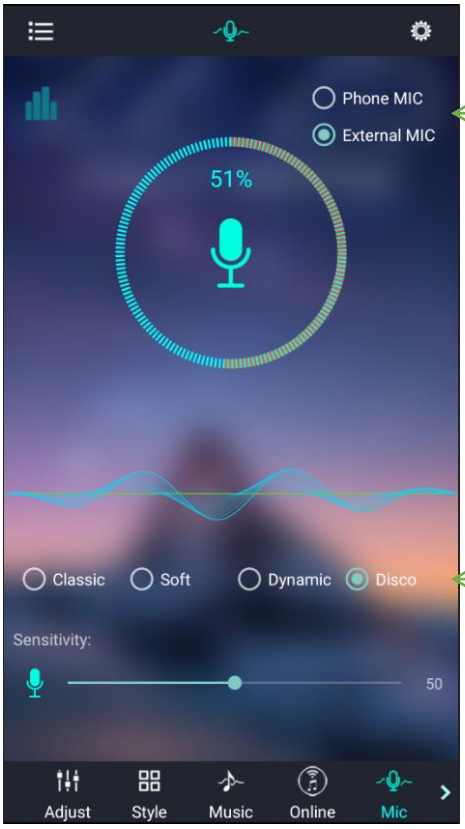

Switch phone microphone and external microphone

4-style rhythm

Change the sensitivity of MIC to match the sound

(10) Switch to the schedule interface:

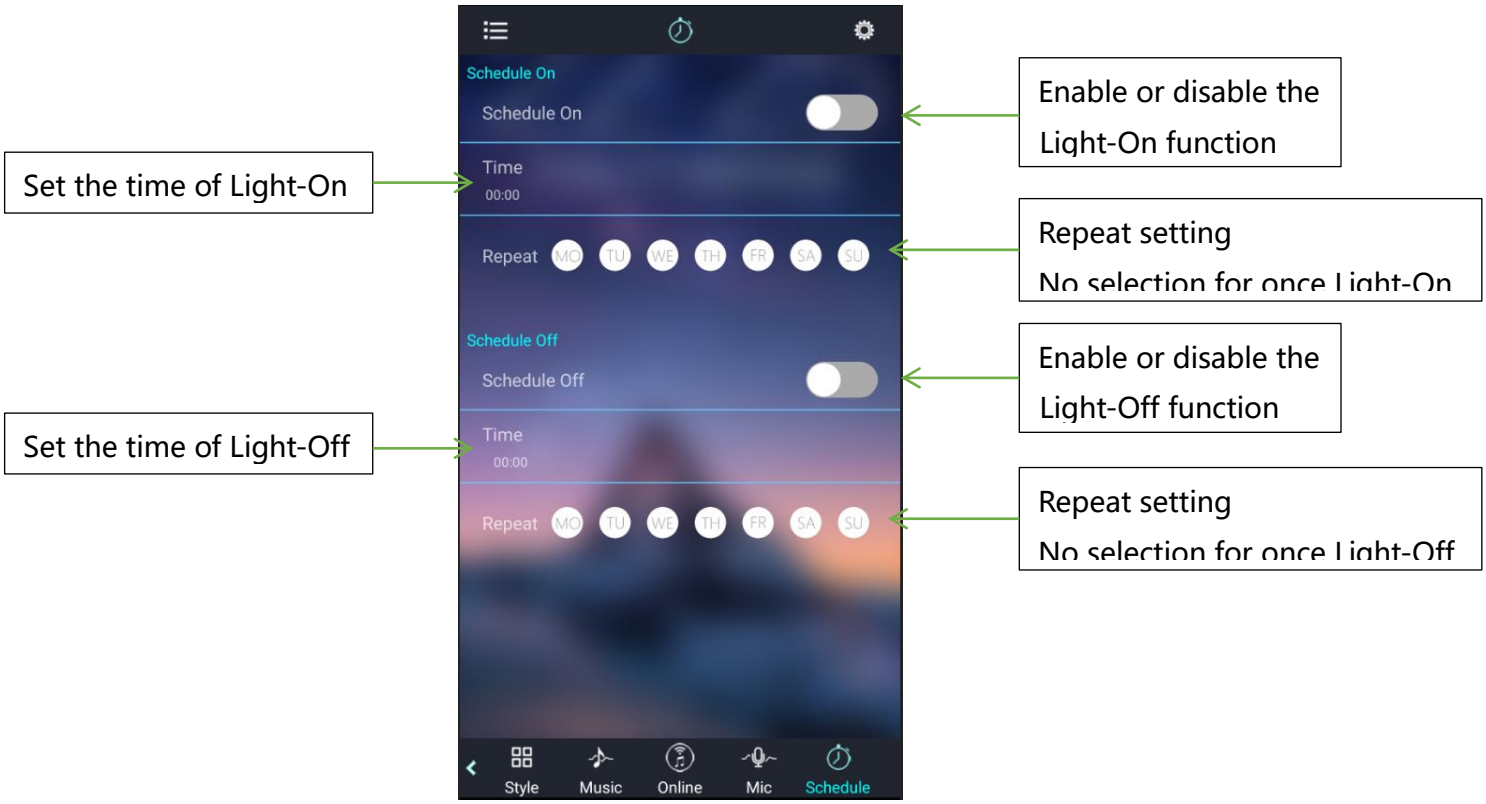

(11) Switch to the modify pin sequence interface:

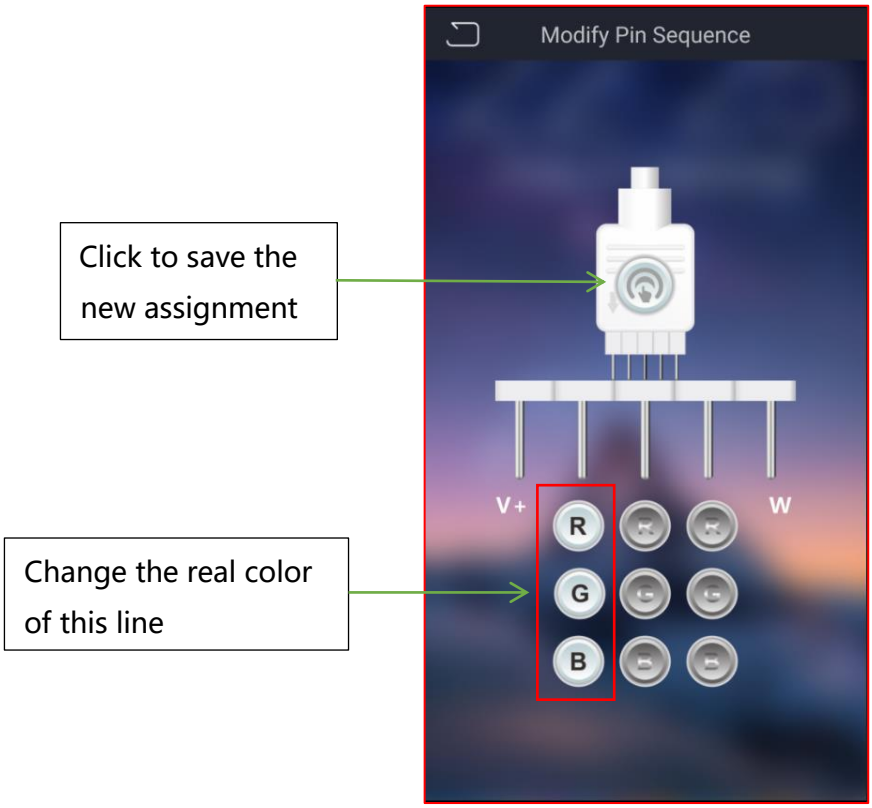

Verification of compliance Verification of compliance Verification of compliance

Verification of Compliance

Verification No.:	MK25070091P01-E01
Name and address of Applicant:	**Shenzhen CWG Technology Co., Ltd** 3/F, Building A, Yongshenghui Industrial Park, Chuangye Road, Shiyan Street, Bao'an District, Shenzhen
Name and address of Manufacturer	**Shenzhen CWG Technology Co., Ltd** 3/F, Building A, Yongshenghui Industrial Park, Chuangye Road, Shiyan Street, Bao'an District, Shenzhen
Product name:	**LED Strip**
Rated:	5V ⎓
Product model(s):	CWG-5050RGB-60D-5V, CWG-5050RGB-30D-12V, CWG-5050RGB-18D-12V, CWG-5050RGB-60D-24V, CWG-5050RGB-60D-12V, CWG-5050RGB-30D-5V, CWG-5050RGB-18D-5V, CWG-5050-60D-12V, CWG-5050-30D-12V, CWG-5050-60D-24V, CWG-HC5050RGB-60D-12V, CWG-HC5050RGB-30D-12V,CWG-HC5050RGB-60D-24V, CWG-HC5050-60D-12V, CWG-HC5050-30D-12V, CWG-HC5050-60D-24V, CWG-HC5050RGB-30D-5V, CWG-HC5050RGB-60D-5V, CWG-HC5050RGB-144D-5V, CWG-2835-60D-12V, CWG-2835-120D-12V, CWG-2835-60D-24V, CWG-2835-120D-24V, CWG-2835-60D-5V, CWG-2835-120D-5V
Product trademark:	创唯光

This verification confirms that the product meets the requirements of the following standard.
The conformity was demonstrated based on following standard(s) listed by European Commission as harmonized with EMC Directive 2014/30/EU.

EN IEC 55015:2019+A11:2020
EN IEC 61547:2023

The verification has been carried out in accordance with individual rules and conditions agreed with the applicant. Evaluation has been carried out in accordance with:

Test report(s) No.:	MK25070091P01-E01
Test conducted by:	TMC Testing Services (Shenzhen) Co., Ltd.
Verification issue date:	July 17, 2025

Notes:
This verification refers to the above mentioned product and its conformity in regards of above mentioned standard(s) was proven on test sample.
This verification does not imply meeting all essential requirements, assessment of the series-production or any other restricted Notified Bodies conformity assessment procedure appropriate for the product.
This verification holder shall use this verification in connection to verification of conformity and technical data relevant for the product the verification was issued.

TMC Testing Services (Shenzhen) Co., Ltd.
t:86-755-86642861 cert@tmc-lab.com www.tmc-lab.com
1st Floor, Block A1, Zone A, Xinshidai Gongrong Industrial Park, No. 2, Shihuan Road, Shiyan Street, Baoan District, Shenzhen, China

Bauart geprüft TMC Product Safety

Lab Manager
Vivian Jiang

Verification of compliance Verification of compliance Verification of compliance

Verification of Compliance

Verification No.:	MK25070091P01-C01
Name and address of Applicant:	**Shenzhen CWG Technology Co., Ltd** 3/F, Building A, Yongshenghui Industrial Park, Chuangye Road, Shiyan Street, Bao'an District, Shenzhen
Name and address of Manufacturer:	**Shenzhen CWG Technology Co., Ltd** 3/F, Building A, Yongshenghui Industrial Park, Chuangye Road, Shiyan Street, Bao'an District, Shenzhen
Product name:	**LED Strip**
Product model(s):	CWG-5050RGB-60D-5V, CWG-5050RGB-30D-12V, CWG-5050RGB-18D-12V, CWG-5050RGB-60D-24V, CWG-5050RGB-60D-12V, CWG-5050RGB-30D-5V, CWG-5050RGB-18D-5V, CWG-5050-60D-12V, CWG-5050-30D-12V, CWG-5050-60D-24V, CWG-HC5050RGB-60D-12V, CWG-HC5050RGB-30D-12V,CWG-HC5050RGB-60D-24V, CWG-HC5050-60D-12V, CWG-HC5050-30D-12V, CWG-HC5050-60D-24V, CWG-HC5050RGB-30D-5V, CWG-HC5050RGB-60D-5V, CWG-HC5050RGB-144D-5V, CWG-2835-60D-12V, CWG-2835-120D-12V, CWG-2835-60D-24V, CWG-2835-120D-24V, CWG-2835-60D-5V, CWG-2835-120D-5V
Product trademark:	创唯光

This verification confirms that the product meets the requirements of the following standard.
The conformity was demonstrated based on following standard(s) listed by European Commission as harmonized with Directive RoHS 2.0 Directive (EU) 2015/863 and (EU)2017/2102 amending Annex II to Directive 2011/65/EU

IEC 62321-1:2013	IEC 62321-3-1:2013
IEC 62321-4:2013/AMD1:2017	IEC 62321-5:2013
IEC 62321-6:2015	IEC 62321-7-1:2015
IEC 62321-7-2:2017	IEC 62321-8:2017
IEC 62321-2:2021	

The verification has been carried out in accordance with individual rules and conditions agreed with the applicant. Evaluation has been carried out in accordance with:

Test report(s) No.:	MK25070091P01-C01
Test conducted by:	TMC Testing Services (Shenzhen) Co., Ltd.
Verification issue date:	July 17, 2025

Notes:
This verification refers to the above mentioned product and its conformity in regards of above mentioned standard(s) was proven on test sample.
This verification does not imply meeting all essential requirements, assessment of the series-production or any other restricted Notified Bodies conformity assessment procedure appropriate for the product.
This verification holder shall use this verification in connection to verification of conformity and technical data relevant for the product the verification was issued.

TMC Testing Services (Shenzhen) Co., Ltd.
t:86-755-86642861 cert@tmc-lab.com www.tmc-lab.com
1st Floor, Block A1, Zone A, Xinshidai Gongrong Industrial Park, No. 2, Shihuan Road, Shiyan Street, Baoan District, Shenzhen, China

Bauart geprüft TMC Product Safety approved

Lab
Vivian Jiang

TMC

精准检测
PRECISE TESTING

CERTIFICATE OF CONFORMITY

No.: PTC25102309601C-EN01

Applicant	:	**Dongguan Yihong Hardware electronics Co., LTD**
Address	:	**Room 901, No. 2, Shangheng Road, Chang'an Town, Dongguan City, Guangdong Province, 523880 China**
Manufacturer	:	**Dongguan Yihong Hardware electronics Co., LTD**
Address	:	**Room 901, No. 2, Shangheng Road, Chang'an Town, Dongguan City, Guangdong Province, 523880 China**
Product Name	:	**Remote contol**
Test Sample Model	:	**YH-448G**
Other Sample Model	:	**YH-6181, YH-6183, YH-629, YH-RF10, YH-RF11, YH-RF17, YH-RF14, YH-RF24, YH-RF16, YH-252, YH-248R, YH-248G, YH-899, YH-689**

The submitted sample of the above equipment has been tested and found to comply with the following European Directive:

RoHS Directive 2011/65/EU & EU No.2015/863

The standard(s) used for showing compliance with the essential requirements:

Applicable Standard(s)	Test Report(s) Number
IEC 62321-1:2013, IEC 62321-2:2021 IEC 62321-3-1:2013, IEC 62321-3-2:2020 IEC62321-4: 2013+AMD1:2017 IEC 62321-5:2013 IEC 62321-6:2015, IEC 62321-7-1: 2015 IEC 62321-7-2: 2017, IEC 62321-8:2017	**PTC25102309601C-EN01**

This certificate is part of the full test report(s) and should be read in conjunction with it. This certificate is based on an evaluation of one sample of above mentioned product. It does not imply assessment of the production of the product. Without the written approval of Precise Testing & Certification (Guangdong) Co., Ltd., this certificate is not permitted to be reproduced, except in full. It is not permitted to use the test lab's logo.

RoHS

PRECISE TESTING & CERTIFICATION (GUANGDONG) CO., LTD.

Jacky Ou

Jacky Ou
Manager
Date:Dec. 04, 2025

Precise Testing & Certification (Guangdong) Co., Ltd.
Building 1, No.6, Tongxin Road, Dongcheng Street,
Dongguan, Guangdong, China
Tel: 86 769 38808222 Web:www.ptc-testing.com
Mail: inquiry@ptc-testing.com

Certificate – Сертификат – 證明書 – Certificat – 등명서 – شهادة

Shenzhen ZKT Technology Co., Ltd.
1/F, No. 101, Building B, No. 6, Tangwei Community Industrial Avenue,
Fuhai Street, Bao'an District, Shenzhen, China

Certificate of Compliance

Certificate Number: ZKT-25070215182C

Certificate's Holder	:	Dongguan Yihong Hardware Electronics Co., Ltd Room 1106, No.2, Shangheng Road, Chang' an Town, Dongguan
Manufacturer	:	Dongguan Yihong Hardware Electronics Co., Ltd Room 1106, No.2, Shangheng Road, Chang' an Town, Dongguan
Trade Mark	:	N/A
Product	:	LED controller
Model(s)	:	YH-6183 YH-252, YH-284, YH-290, YH-287, YH-358, YH-360, YH-6180, YH-6184

Requirement	Standard	Report No.
Art.3.1(a) Safety	EN IEC 62368-1:2024+A11:2024	ZKT-25070215183S
Art.3.1(a) Health	EN IEC 62311:2020 EN 50665:2017	ZKT-25070215182E-1
Art.3.1(b) EMC	ETSI EN 301 489-1 V2.2.3 (2019-11) ETSI EN 301 489-17 V3.3.0 (2024-07)	ZKT-25070215182E-2
Art.3.2 Radio	ETSI EN 300 328 V2.2.2 (2019-07)	ZKT-25070215182E-3

This Attestation of Compliance is issued on a voluntary basis for electrical equipment below the voltage limits of Radio Equipment Directive (RED) 2014/53/EU. The essential requirement are fulfilled accordingly based on the technical specifications applicable at the time of issuance.

Shenzhen ZKT Technology Co., Ltd.
Approved
Manager
Jul. 07, 2025

This Certificate of Conformity is based on single evaluation of the submitted sample(s) of the above mentioned product. It does not imply an assessment of the whole product and relevant . Directives to be observed.