VEVOR

Upgrade · The Home Creator Way

AIR JACK

MODEL: ZG-G / ZG-H / ZG-E / ZG-C / ZG-B / ZG-A

VEVOR Support Center

1	ZG-A (RED)		7	ZG-E (RED)	
2	ZG-E (BLUE)		8	ZG-G (BLUE)	
3	ZG-G (RED)		9	ZG-C (RED)	
4	ZG-G (WHITE)		10	ZG-A (BLUE)	
5	ZG-H (WHITE)		11	ZG-B (WHITE)	
6	ZG-E (WHITE)		12		

VEVOR
Upgrade · The Home Creator Way

AIR JACK

ZG-G	ZG-H
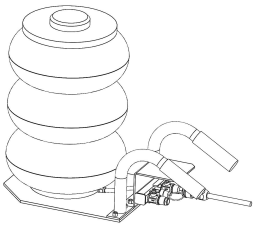	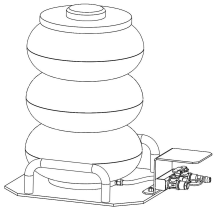
ZG-E ZG-B	**ZG-C ZG-A**
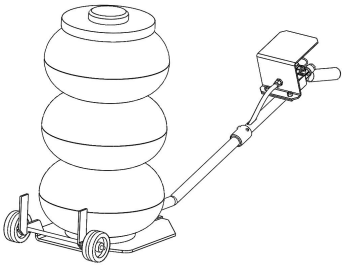	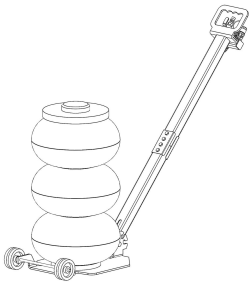

This is the original instruction, please read all manual instructions carefully before operating. VEVOR reserves a clear interpretation of our user manual. The appearance of the product shall be subject to the product you received. Please forgive us that we won't inform you again if there are any technology or software updates on our product.

IMPORTANT SAFEGUARDS

WARNING: Please read these instructions carefully before using your jack. Proper use and care of the jack will be helpful to assure you of continuous safe, trouble-free problems.

WARNING: Please read these instructions carefully before using your jack. Proper use and care of the jack will be helpful to assure you of continuous safe, trouble-free problems.

The product complies with relevant standards and regulations. Installation of this device must comply with all applicable regulations, and it should only be operated in well-ventilated areas. Please read the user manual before installing and using this equipment.

This appliance is not intended for use by persons (including children) with reduced physical, sensory or mental capabilities, or lack of experience and knowledge, unless they have been given supervision or instruction concerning use of the appliance by a person responsible for their safety.

Children shall not play with the appliance.

Please properly keep product. Check whether the product is abnormal before use. If it is abnormal, please stop using it.

Please use the product according to the intended use, warn of potential injury from misuse.

The product complies with BS EN 1494:2000+A1:2008 standards and regulations. Installation of this device must comply with all applicable regulations, and only using the jack on level ground and where to place the jack for safe lifting.Please read the user manual before installing and using this equipment.

It is forbidden to lift people or animals.

It is not allowed to work under the raised load until it is secured by suitable means.

No modifications shall be carried out which adversely affect the compliance of the jack with this standard.

If the jack is damaged, it must be maintenance and repair by the manufacturer or its service agent.

The product is not waterproof, must not be immersed.

1. The air jack is specially designed for work requiring heavy lifting. It cannot be used as a support element for permanent positioning.
2. Do not exceed the maximum lifting load. It is forbidden to lift people or animals. For lifting only.
3. The air jack is only used in the process of rising and falling; before working in the vehicle, use additional safety devices (such as supports) to support the raised vehicle.
4. Please make sure that the ground can support the weight you are lifting. The jack must be placed on relatively level, solid ground. The jack shall be placed under the lifted axle box to support the load on the middle part of the jack.
5. Never adjust the safety valve.
6. Please place a triangle block under the car dependency wheel.
7. The normal operating pressure is in the range of 0.5-1.0Mpa.
8. Compressed air should be clean and contain no water.
9. There's no need to raise the balloon to the maximum, as long as it is to the desired height(such as to cram off the ground), that is to say, to close the ball valve switch to stop the gas supply, to cram the safety bracket, and then to work.
10. Remember that if the balloon rises to the maximum (Stop rising), immediately shut off the valve switch and stop the supply.
11. When used, the jack should take a position outside of the center by 10-20cm. That is, Jack should be put under the car just a little.
12. When not in use, it should be placed indoors and mustn't be placed outdoors. And please use the supplied accessories.
13. It is strictly prohibited to disassemble the jack balloon subject.
14. Do not exceed the rated capacity, or loss of load may occur.
15. After stopping inflation, the air jack can remain elevated for about 40 minutes. If you need to support the vehicle for a long time, please use a bracket to support it.

WARNING:

DO NOT USE THE JACK TO SUPPORT OR STABILIZE A LOAD.

1. Using the jack to support or stabilize a load may result in unexpected movement and result in serious injury, crushing and death. Always securely chock and block (stabilize) the load to be lifted. Never place any part of the body under a

raised load without properly choking and supporting the load.

2. Never use the jack on curved or tubular vehicle bumpers; this will result in the vehicle slipping off the jack and falling, causing serious injury or death. Use a bumper lift for vehicles with curved bumpers or plastic bumpers.

3.Do not move or dolly the vehicle while the jack is in use.

LIFTING CAUTIONS:



Weight must be supported by a set of jack stands rated at the proper capacity before any work or inspection can be done on vehicle. Don't exceed the rated capacity or loss of load may occur.



Always firmly apply the parking brake.



This jack is designed for use on hand. Only use for level surfaces, on uneven, unstable surfaces, could result in stability and possible failure to support the load.



Place wheel chocks at the front and rear of the tires that won't be lifted before proceeding.



Always center the jack under the axle of a flat reinforced or frame surface.

SAVE THESE INSTRUCTIONS

TECHNICAL DATA

	Short Handle		Long Handle	
Model	ZG-G	ZG-H	ZG-E/ZG-B	ZG-C/ZG-A
Capacity	3 tons	3 tons	3 tons/5 tons	3 tons / 5 tons
Lifting height range	140-450mm		140~450mm / 140~400mm	140~450mm / 140~464mm
Working Temp	-60℃~+50℃			
Lifting Time	3-10sec			
Working Pressure	8-10kg/cm² 0.8-1.0Mpa 116-145Psi			
Air Inlet	G1/4			

Lifting Height with different air pressures

Working pressure 9-9.5 kgf/cm² (128-135 PSI)	Model	Tons	0	1	1.5	2	2.5	3	3.5	4	4.5	5	5.5	6
		lbs	0	2200	3300	4400	5500	660	7700	8800	9900	11000	12100	13200
Lifting height	ZG-G, ZG-H, ZG-E, ZG-C	mm	450	450	430	415	400	380	370	355	/	/	/	/
		inch	17.7	17.7	16.9	16.3	15.7	15.0	14.6	14.0	/	/	/	/
	ZG-B	mm	400	400	400	400	400	400	395	390	375	365	355	350
		inch	15.7	15.7	15.7	15.7	15.7	15.7	/	/	/	/	/	/
	ZG-A	mm	464	464	464	464	460	453	443	434	425	415	400	390
		inch	18.3	18.3	18.3	18.3	18.1	17.8	17.4	17.1	16.7	16.3	15.7	15.4

PACKING LIST

Parts		ZG-G	ZG-H	ZG-E/ZG-B	ZG-C/ZG-A
Air Jack	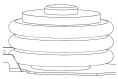	1	1	1	1
Valve Component		1	1	1	/
Accessory Kits	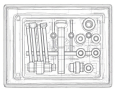	1	1	1	1
Handle		2	/	/	/
Connecting Rod		/	/	1	/
Handle		/	/	1	/
Connecting Rod A	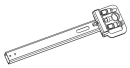	/	/	/	1
Connecting Rod B	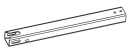	/	/	/	1
User Manual		1	1	1	1

ZG-G INSTALLATION

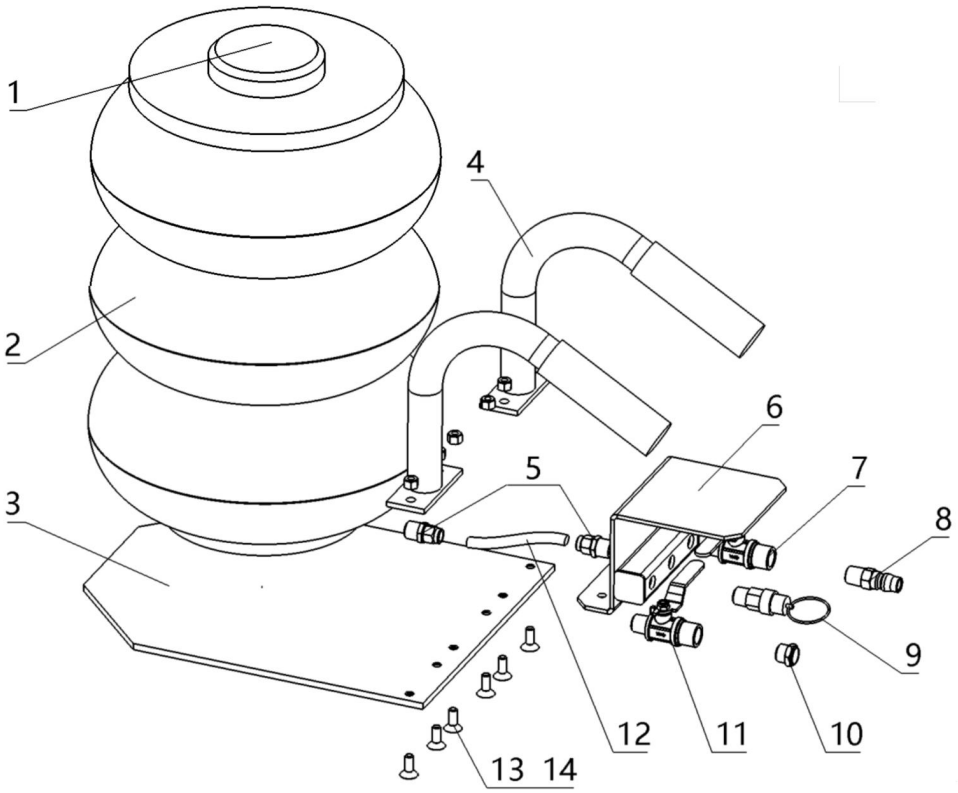

NO.	NAME	NO.	NAME
1	Rubber Pad	8	Inlet Port
2	Airbag	9	Relief Valve
3	Bottom Plate	10	Silencer
4	Handle	11	Exhaust Valve
5	Air Connector	12	Air Pipe
6	Valve Component	13	M6 Countersunk Head Screw
7	Intake Valve	14	M6 Nut

Installation steps

1. Open the accessory kits.

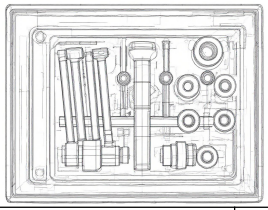

			
M6 Nut	M6 Screw	Inlet Port (Us)	Inlet Port (Eur)
6pcs	6pcs	1pcs	1pcs

2. Install the Valve Component and Inlet Port.

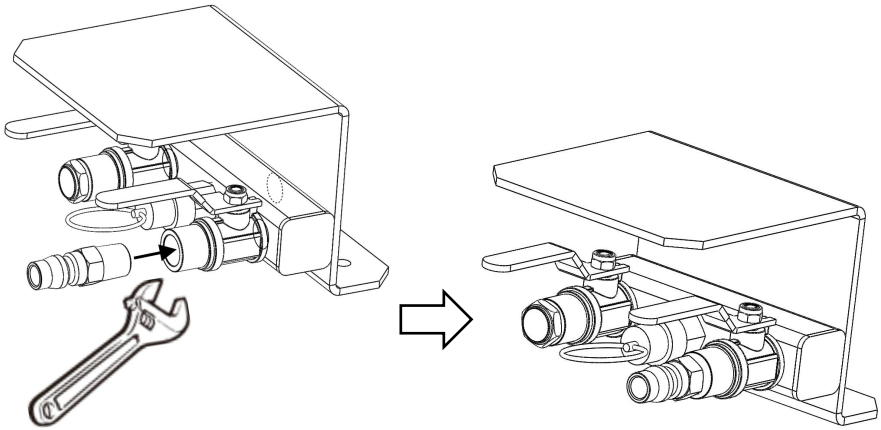

3. Install the Air Jack and Valve Component and Handle with M6 Countersunk Head Screw and M6 Nut.

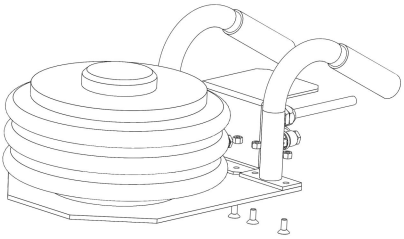

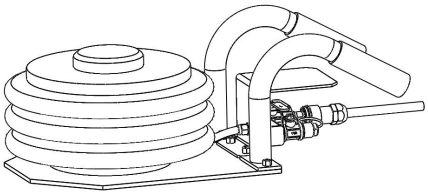

4. Lock the air pipe in the connector of the Valve Component.

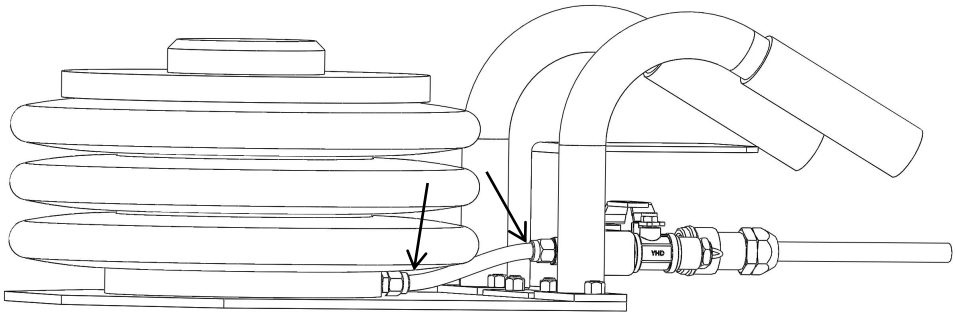

5. Valve Component Description.

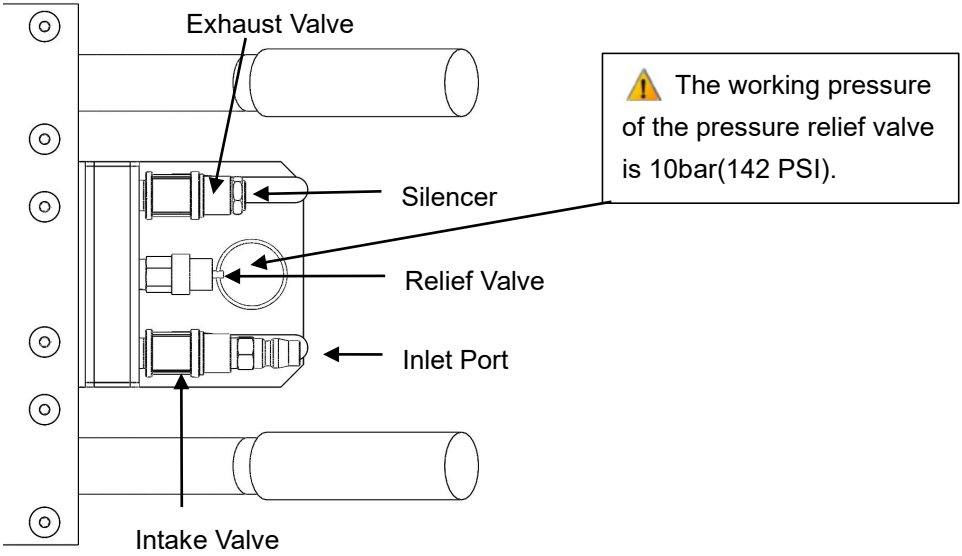

6. Connect the inflation pipeline to the Inlet Port.

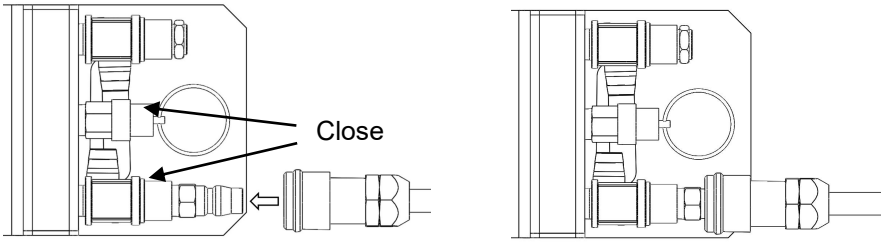

7. Open the green intake valve for inflation, raise the airbag to the appropriate height, and close the intake valve to complete the process. (Note: Ensure the vent valve is closed during inflation, and maintain an inflation pressure of 6-8 MPa).

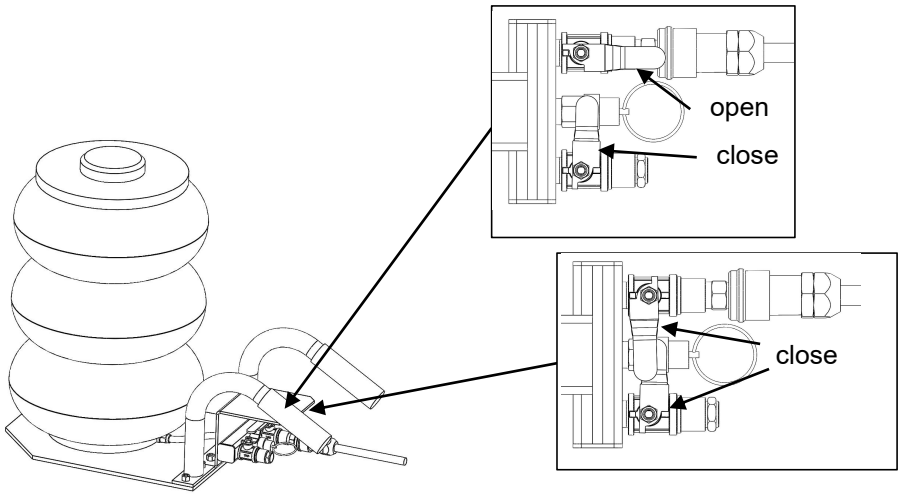

5. Deflate: Release air pressure by opening the red exhaust valve until the airbag reaches its lowest point, then close the exhaust valve. (Please note: Ensure the intake valve is closed during the bleeding process).

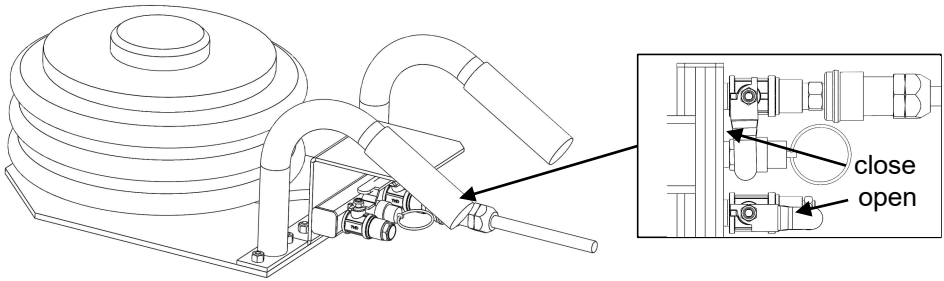

ZG-H INSTALLATION STEPS

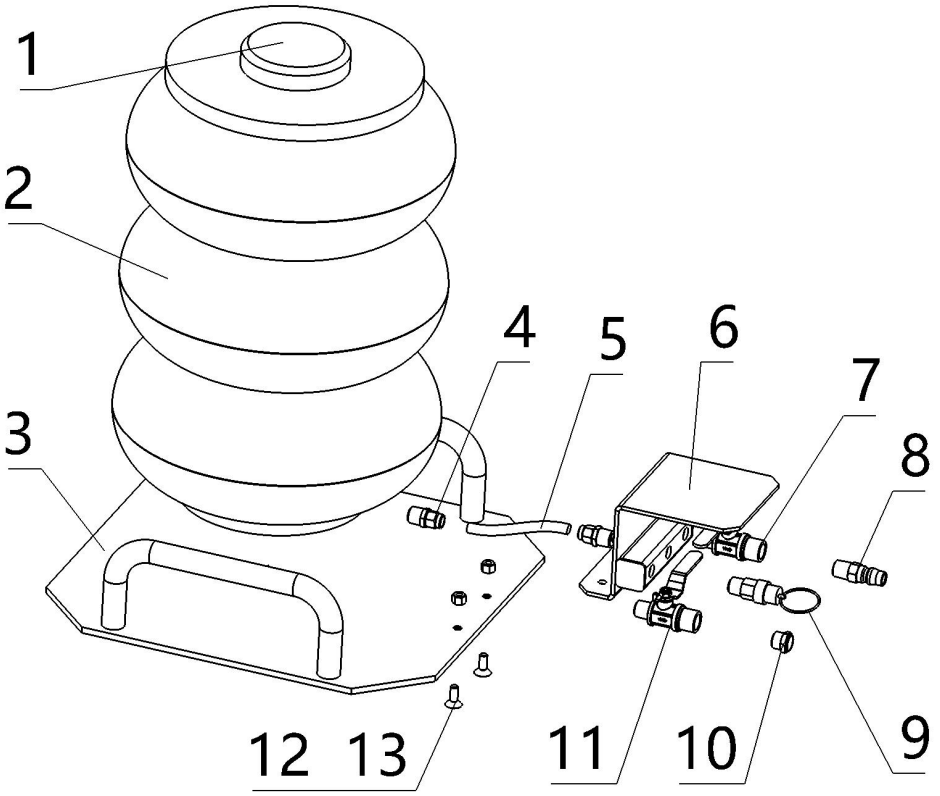

NO.	NAME	NO.	NAME
1	Rubber Pad	8	Inlet Port
2	Airbag	9	Relief Valve
3	Bottom Plate	10	Silencer
4	Air Connector	11	Exhaust Valve
5	Air Pipe	12	M6 Countersunk Head Screw
6	Valve Component	13	M6 Nut
7	Intake Valve	14	

Installation steps

1. Open the accessory kits.

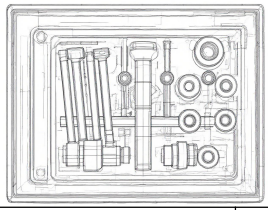

		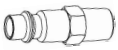	
M6 Nut	M6 Screw	Inlet Port (Us)	Inlet Port (Eur)
2pcs	2pcs	1pcs	1pcs

2. Install the Valve Component and Inlet Port.

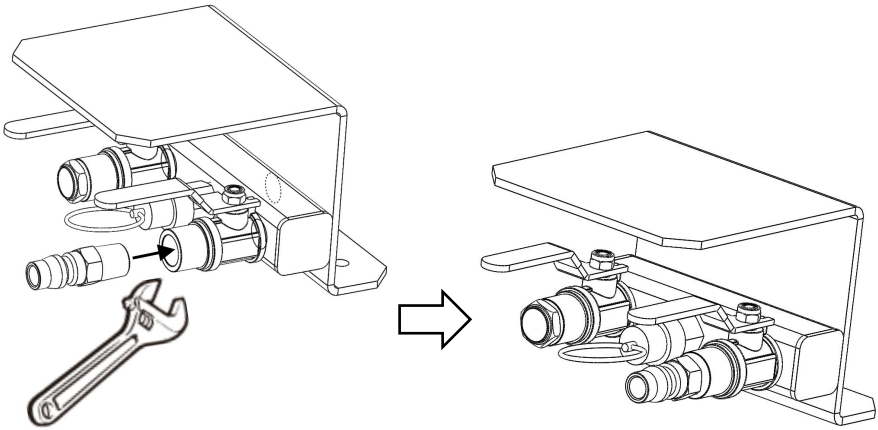

3. Install the Air Jack and Valve Component with M6 Countersunk Head Screw and M6 Nut.

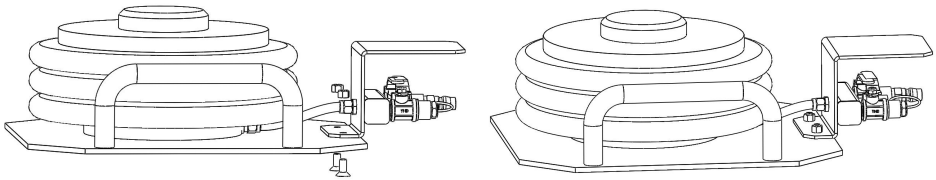

4. Lock the air pipe in the connector of the Valve Component.

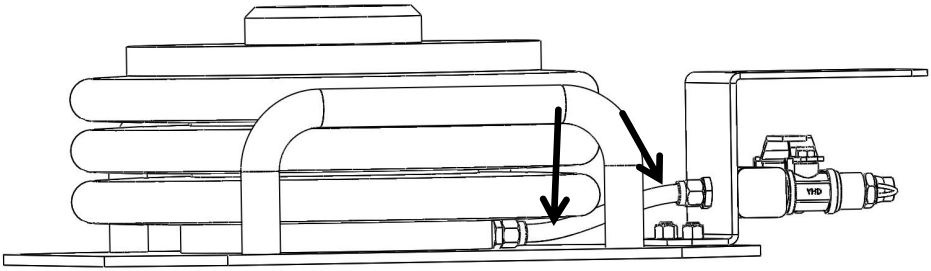

5. Valve Component Description.

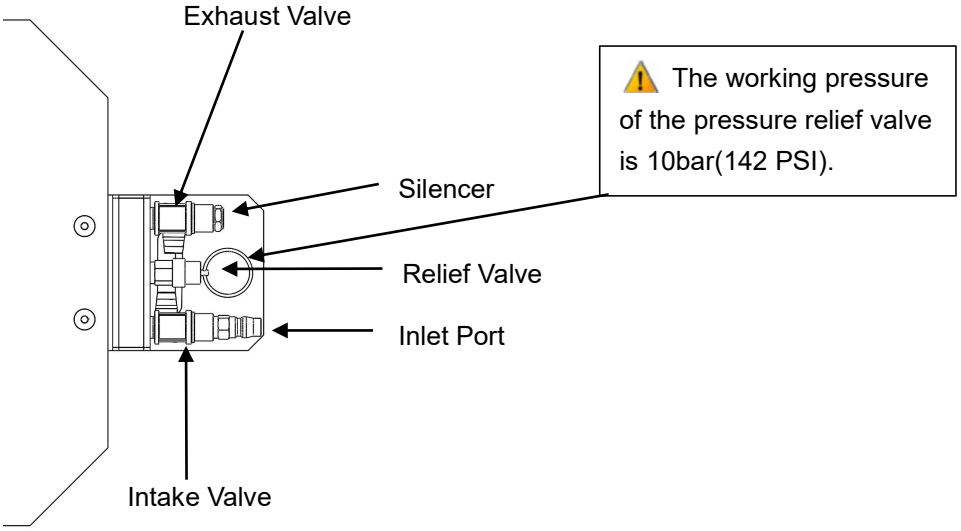

6. Connect the inflation pipeline to the Inlet Port.

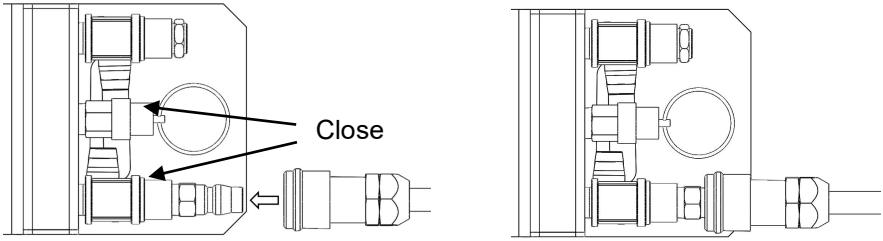

7. Open the green intake valve for inflation, raise the airbag to the appropriate height, and close the intake valve to complete the process. (Note: Ensure the vent valve is closed during inflation, and maintain an inflation pressure of 6-8 MPa).

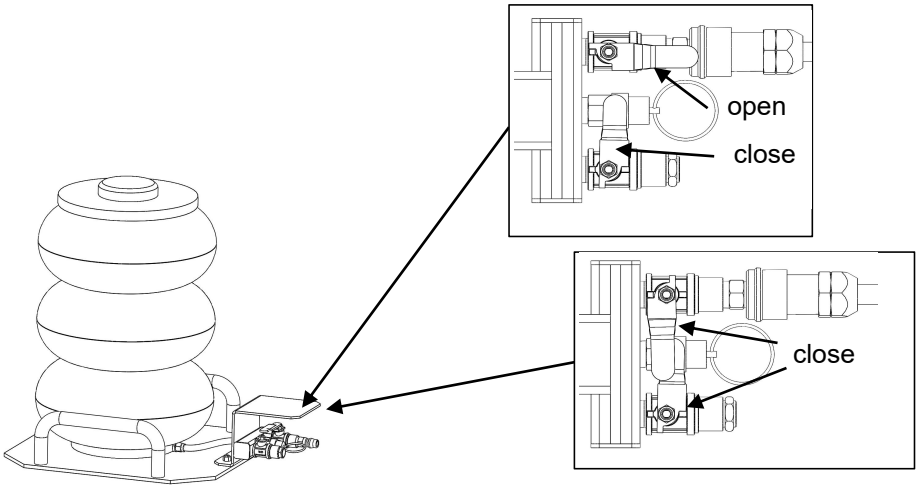

8. Deflate: Release air pressure by opening the red exhaust valve until the airbag reaches its lowest point, then close the exhaust valve. (Please note: Ensure the intake valve is closed during the bleeding process).

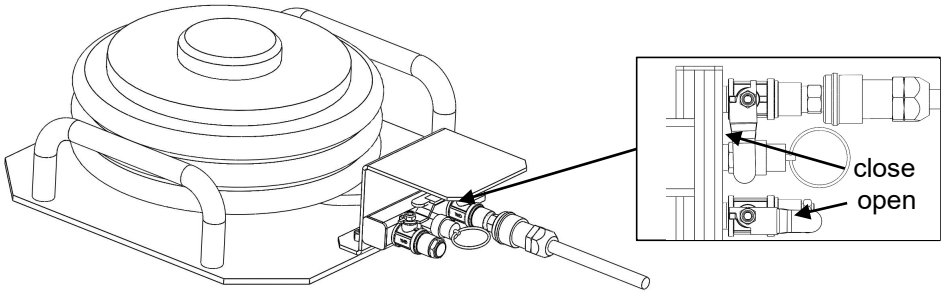

ZG-E ZG-B INSTALLATION

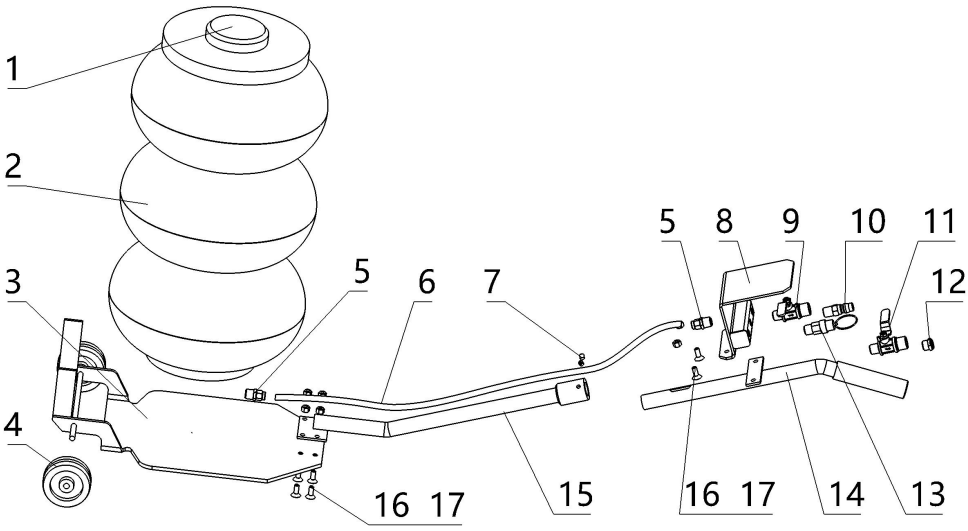

NO.	NAME	NO.	NAME
1	Rubber Pad	10	Inlet Port
2	Airbag	11	Exhaust Valve
3	Bottom Plate	12	Silencer
4	Wheel	13	Relief Valve
5	Air Connector	14	Handle
6	Air Pipe	15	Connecting Rod
7	Set Screw	16	M6 Countersunk Head Screw
8	Valve Component	17	M6 Nut
9	Intake Valve		

Installation steps

1. Open the accessory kits.

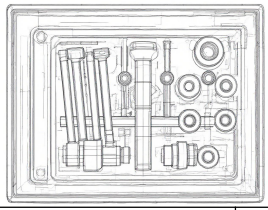

			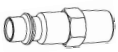	
M6 Nut	M6 Screw	Set Screw	Inlet Port (Us)	Inlet Port (Eur)
6pcs	6pcs	2pcs	1pcs	1pcs

2. Install the Valve Component and Inlet Port.

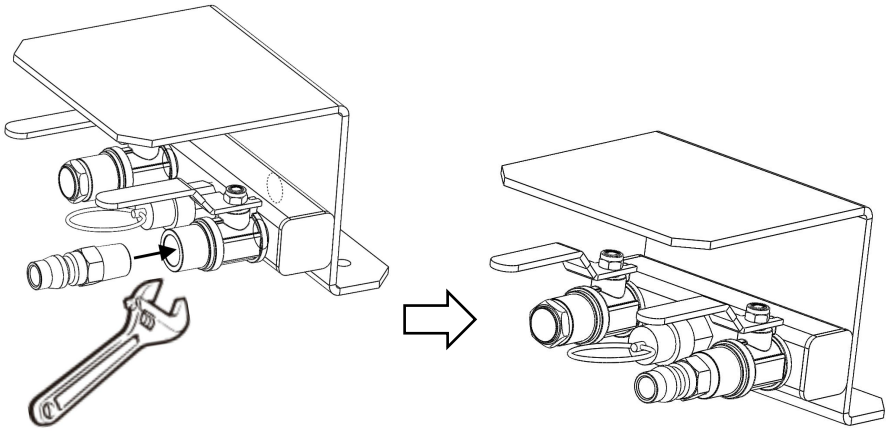

3. Thread the air pipe through the connecting rod,align the connecting rod with the airbag,tighten the M6 countersunk head screws and M6 nuts to secure.

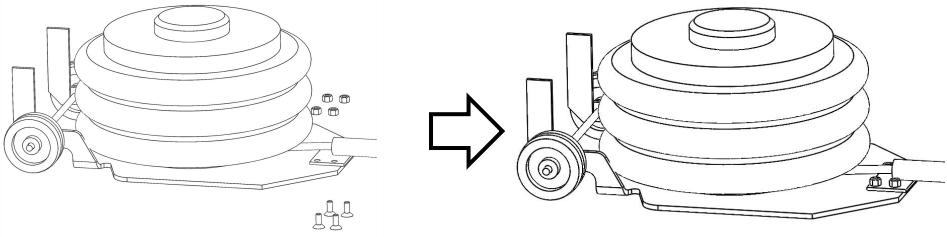

Thread the air pipe through the Handle,Insert the handle into the circular hole of the connecting rod,Tighten the set screw to secure.

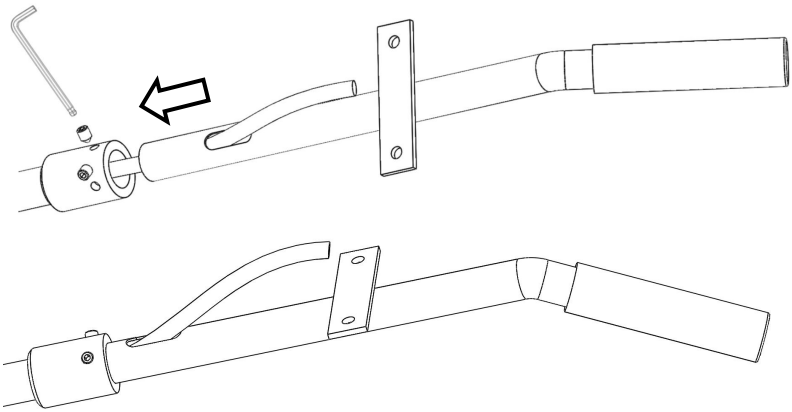

4. Lock the air pipe in the connector of the Valve Component.

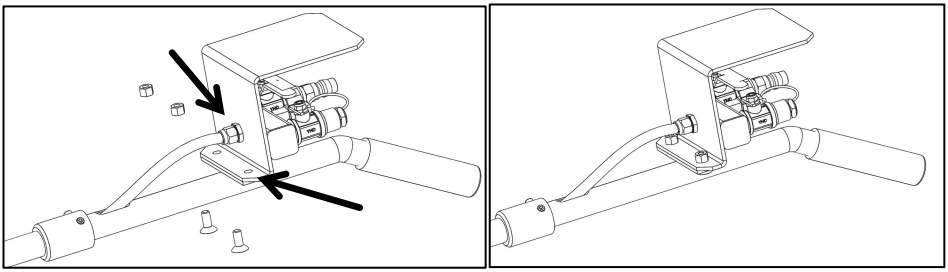

5. Valve Component Description.

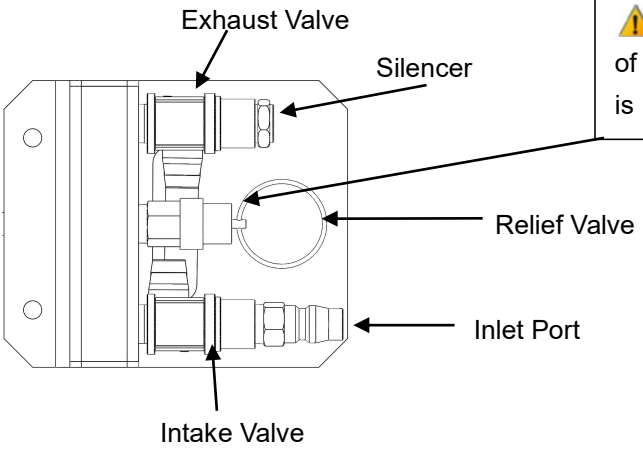

⚠ The working pressure of the pressure relief valve is 10bar(142 PSI).

6. Connect the inflation pipeline to the Inlet Port.

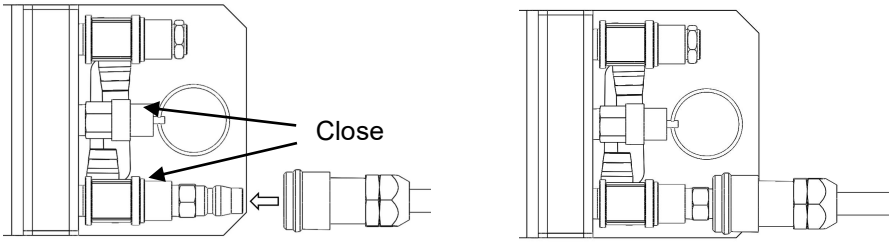

7. Open the green intake valve for inflation, raise the airbag to the appropriate height, and close the intake valve to complete the process. (Note: Ensure the vent valve is closed during inflation, and maintain an inflation pressure of 6-8 MPa).

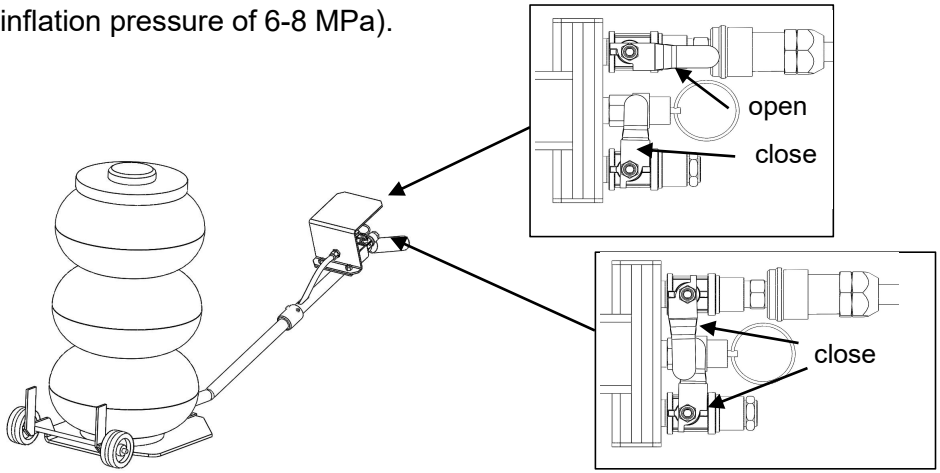

8. Deflate: Release air pressure by opening the red exhaust valve until the airbag reaches its lowest point, then close the exhaust valve. (Please note: Ensure the intake valve is closed during the bleeding process).

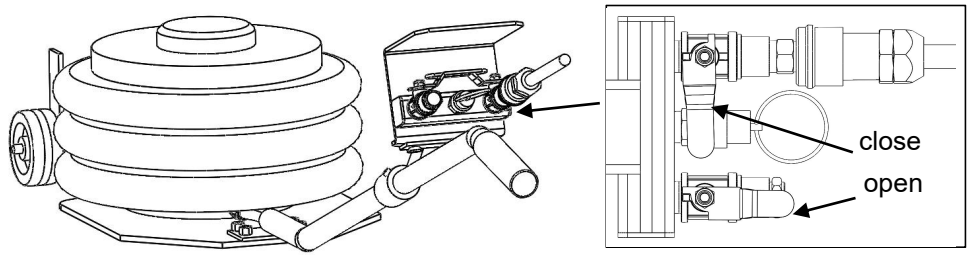

ZG-C ZG-A INSTALLATION STEPS

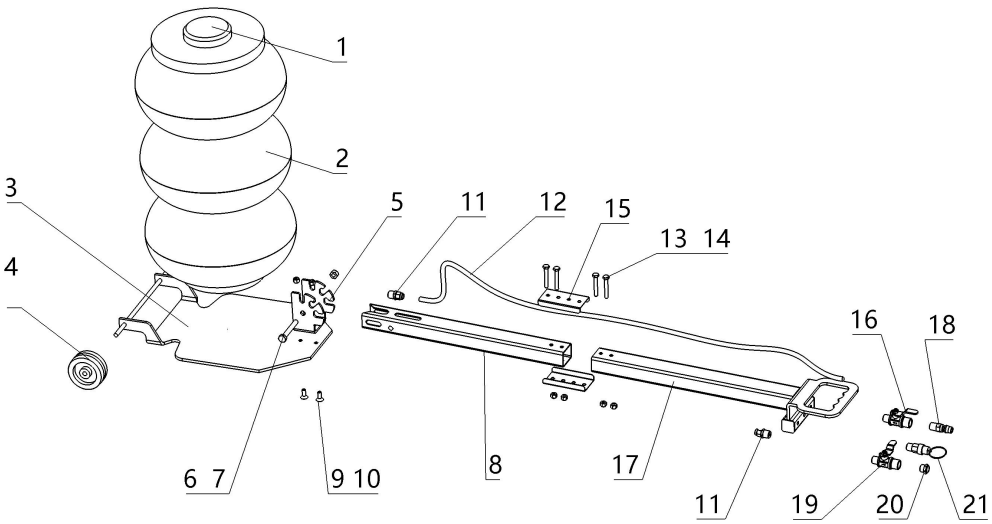

NO.	NAME	NO.	NAME
1	Rubber Pad	12	Air Pipe
2	Airbag	13	M6 Screw
3	Bottom Plate	14	M6 Nut
4	Wheel	15	Clamping Plate
5	Angle Adjustment Plate	16	Intake Valve
6	M8 Screw	17	Connecting Rod A
7	M8 Nut	18	Inlet Port
8	Connecting Rod B	19	Exhaust Valve
9	M6 Countersunk Head Screw	20	Silencer
10	M6 Nut	21	Relief Valve
11	Air Connector		

Installation steps

1. Open the accessory kits.

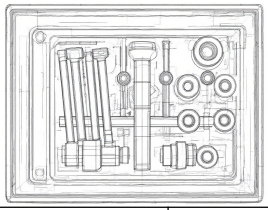

		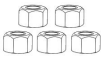		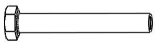		
Clamping Plate	M6 Screw	M6 Nut	M8 Nut	M8 Screw	Inlet Port (Us)	Inlet Port (Eur)
2pcs	4pcs	5pcs	1pcs	1pcs	1pcs	1pcs

2. Install the Connecting Rod A and Inlet Port.

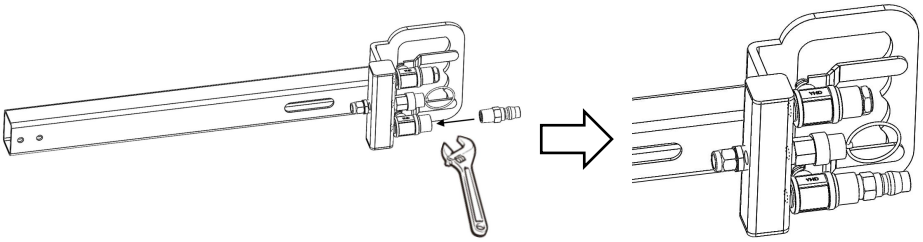

3. Install the Connecting Rod A and Connecting Rod B with Clamping Plate, M6 Screw, M6 Nut .

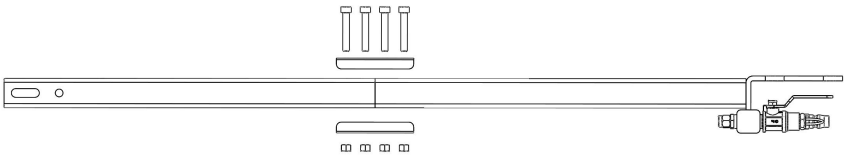

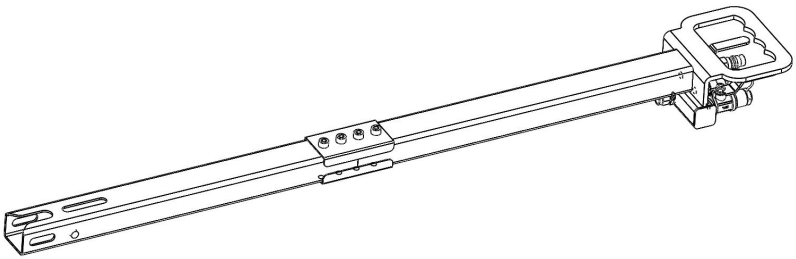

4. Install the Air Jack and Connecting Rod A with M8 Screw and M8 Nut.

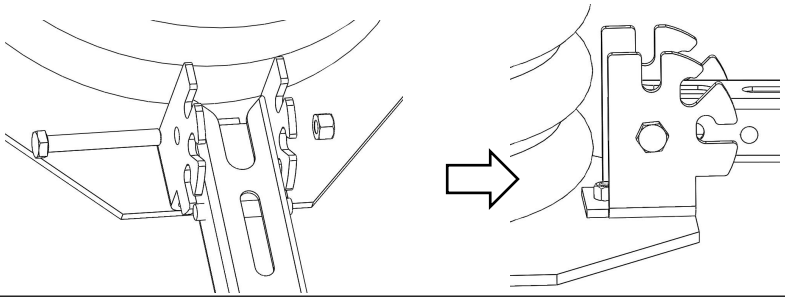

5. Insert the air pipe through hole A and exit hole B,and lock the air pipe in the connector.

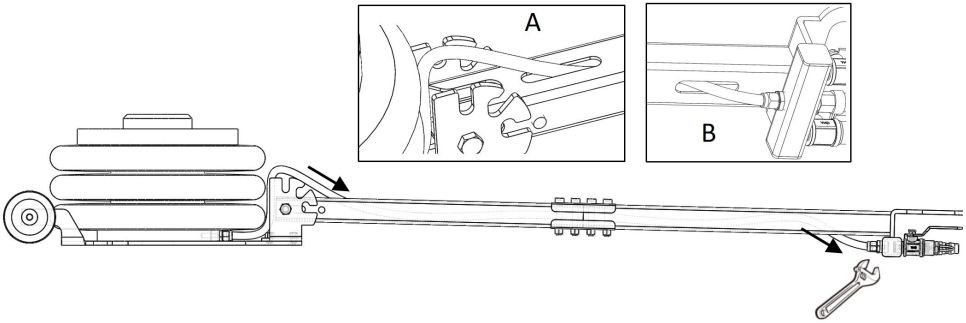

6. Valve Component Description.

⚠ The working pressure of the pressure relief valve is 10bar(142 PSI).

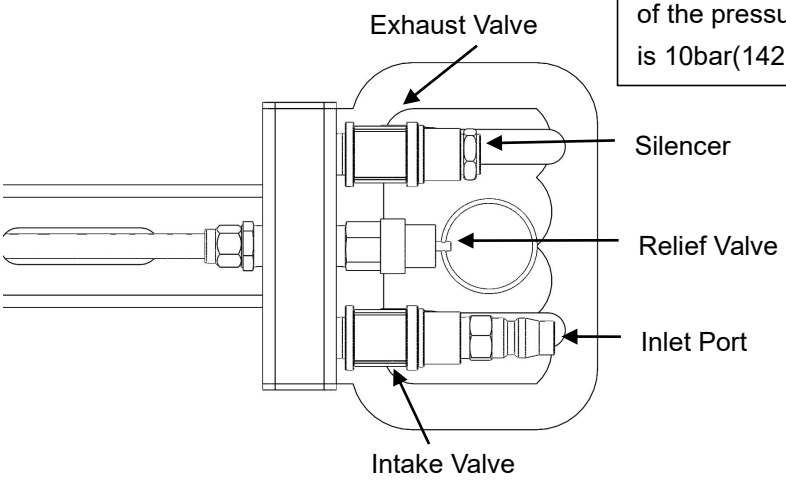

7. Connect the inflation pipeline to the Inlet Port.

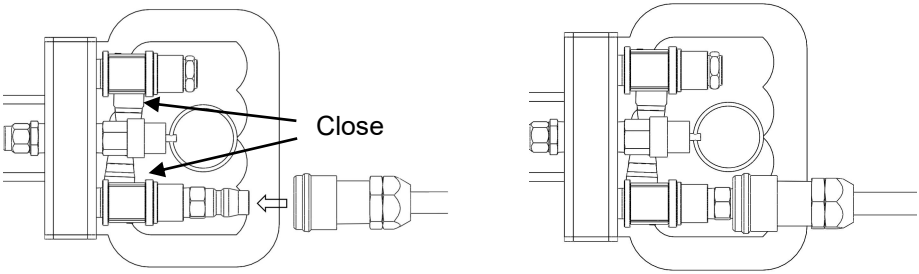

8. Open the green intake valve for inflation, raise the airbag to the appropriate height, and close the intake valve to complete the process. (Note: Ensure the vent valve is closed during inflation, and maintain an inflation pressure of 6-8 MPa).

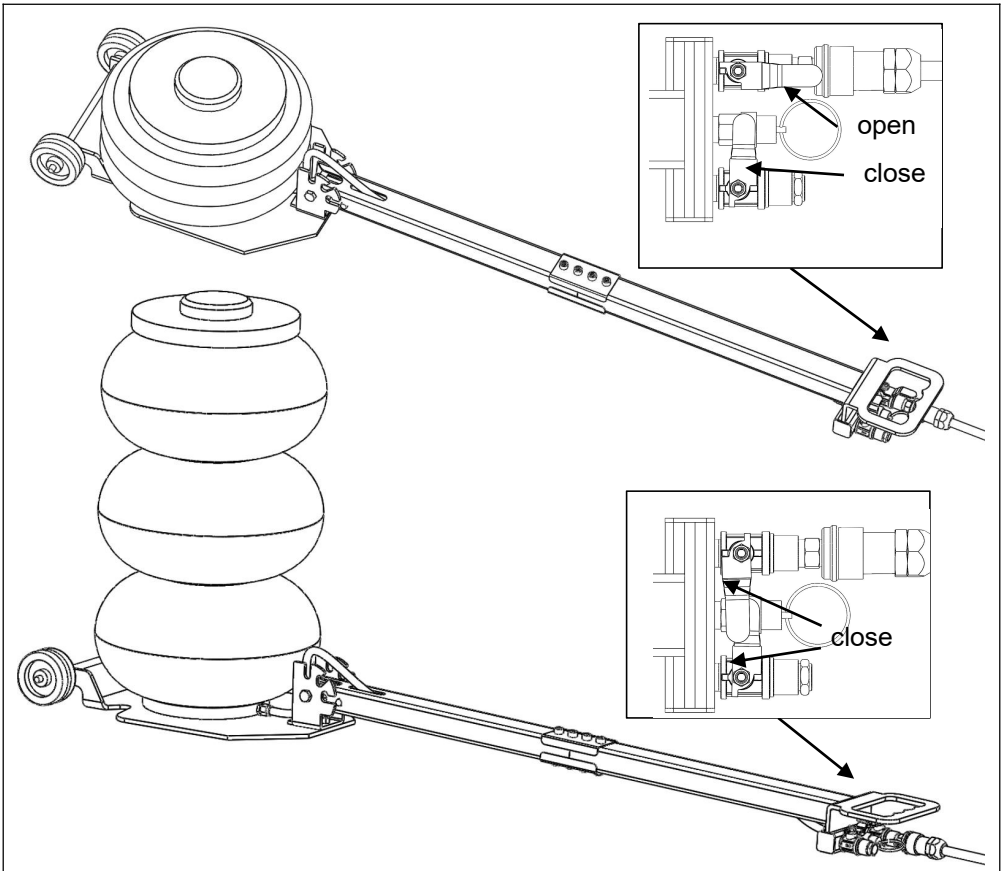

9. Deflate: Release air pressure by opening the red exhaust valve until the airbag reaches its lowest point, then close the exhaust valve. (Please note: Ensure the intake valve is closed during the bleed

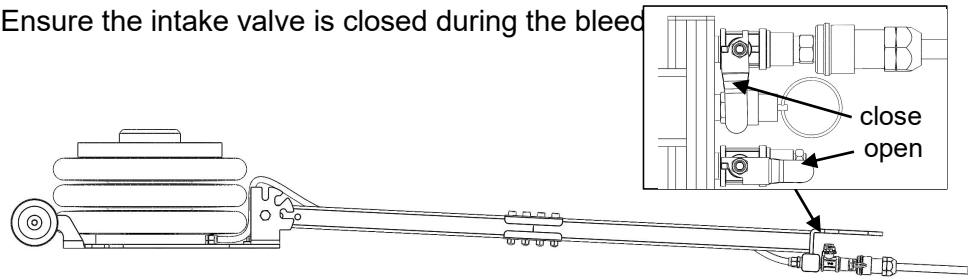

Illustrations of Jacking Points for Various Vehicle Types

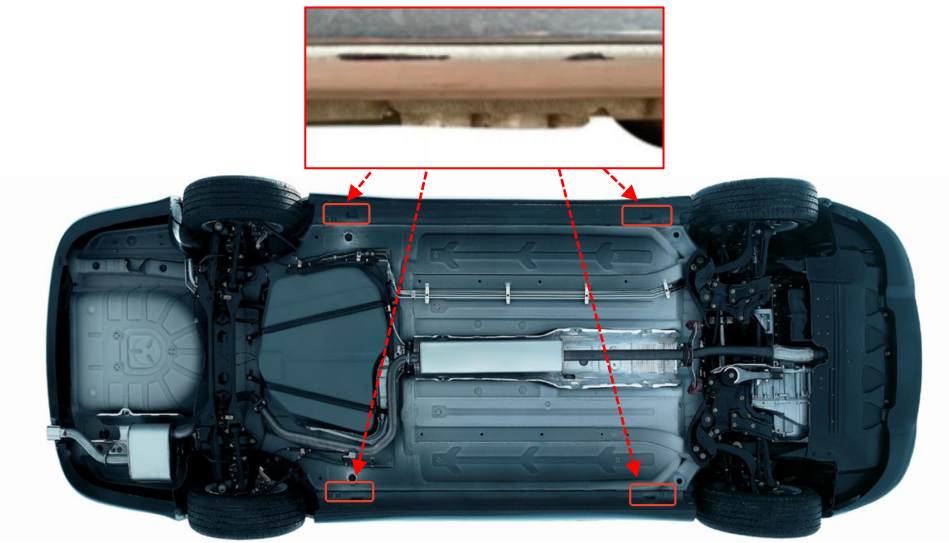

Note 1: Sedan Type

There are support points on the bottom of both sides of the sedan. Note: Do not jack up the vulnerable parts on the bottom—this may cause damage to both the vehicle and the product.

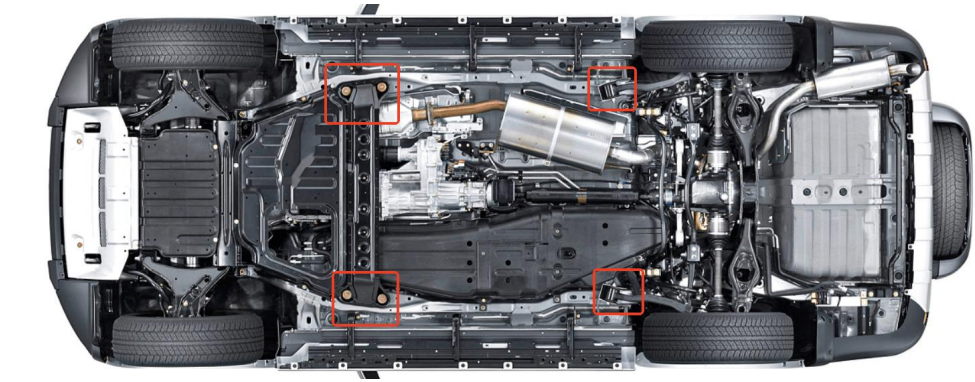

Note 2: Unibody SUV (Roof Side Rail)

The chassis structure of SUV models differs from that of sedans. The stress-bearing points are located on the roof side rails. Note: Do not jack up the vulnerable parts on the bottom—this may cause damage to both the vehicle and the product.

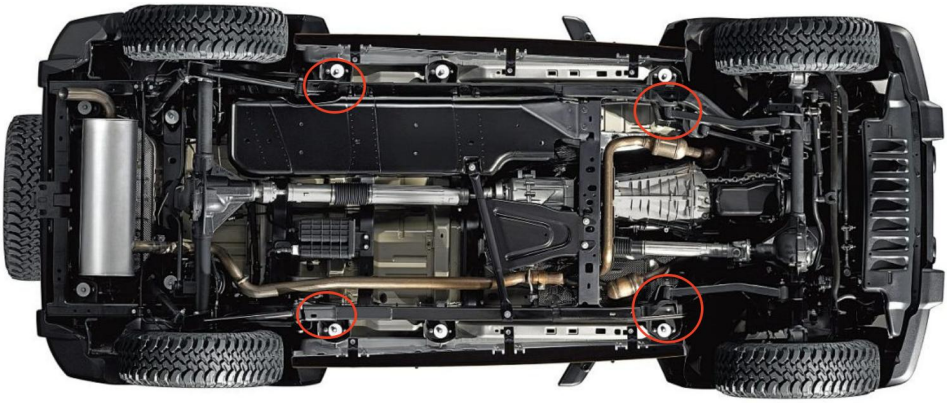

Note 3: Body-on-Frame Off-Road Vehicle (Main Chassis Rail)

The chassis of off-road vehicle models is equipped with a main frame. The stress-bearing points are located on the main chassis rails. Note: Do not jack up the vulnerable parts on the bottom—this may cause damage to both the vehicle and the product.

WARNING: Please jack up the vehicle ONLY at the Jacking Points as indicated in the diagram. Jacking at non-load-bearing positions is strictly prohibited. Otherwise, it may cause damage to the vehicle or airbag jack, as well as safety issues. No liability will be accepted for any resulting losses.

INSTRUCTIONS FOR USE

When inflating, the jack will rise and vice versa.

1. Assemble the product and connect the inflation hose to the corresponding valve.

2. Insert the line with compressed air into the right gas nozzle and close the left switch.

3. Open the right ball valve switch. Once the gasbag rises, it can be used.

4. To lower the jack, simply open the left switch.

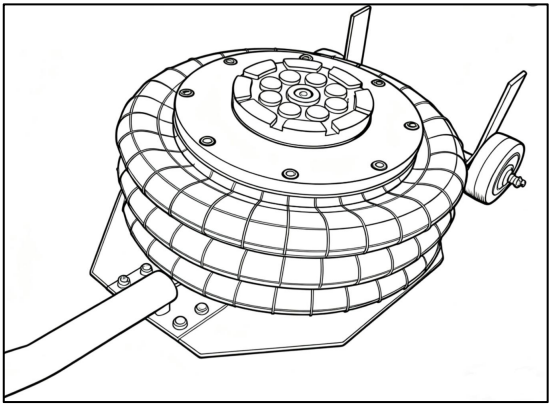

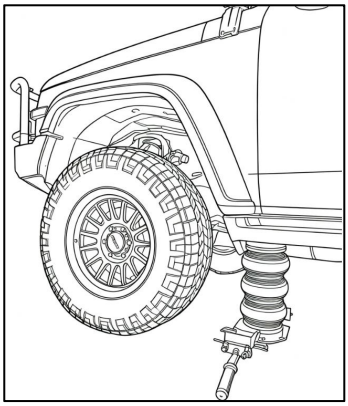

1. Assemble the jack and position it under the area to be lifted.

2. Connect the air pipe to the intake valve, open the green intake valve, raise the airbag to the desired height, and then close the green intake valve

3. After use, open the red exhaust valve, release the air until the airbag reaches its lowest position, close the red valve, and the operation is complete.

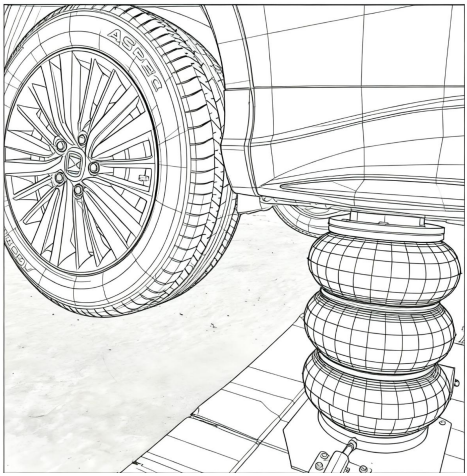

⚠ **Precautions: Weight must be supported by a set of jack stands rated at the proper capacity before any work or inspection can be done on vehicle. Don't exceed the rated capacity or loss of load may occur.**

The airbag jack cannot be lifted for a long time, and the bracket jack needs to be replaced if the car is lifted for a long time.

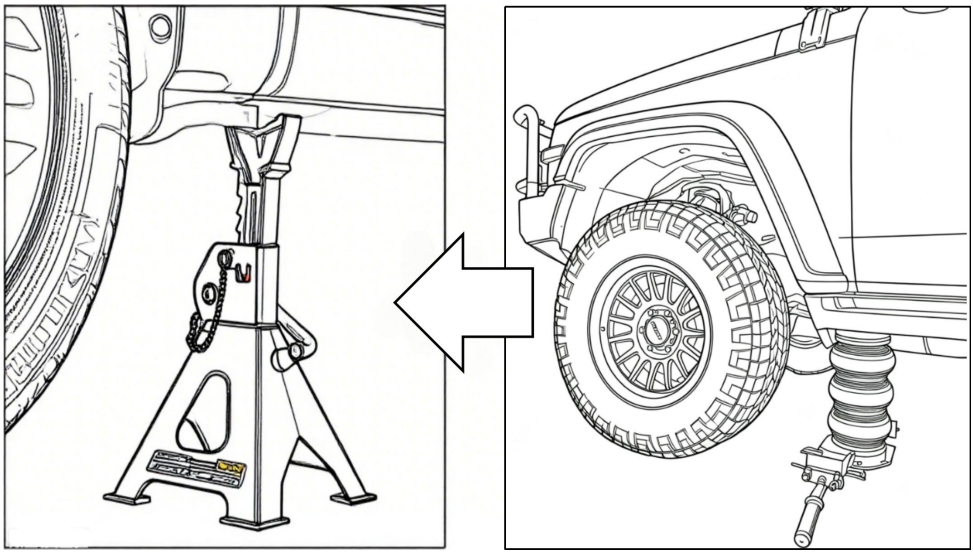

SUV INSTRUCTIONS FOR USE

For SUV models with higher chassis types, it is recommended to follow the diagram below for easy maintenance work

NOTE:

1. To be used on flat ground, not on slopes;
2. Jacks can only be used to lift the car for a short period of time. For safety reasons, a support bracket is needed to lift the car for a long period of time.

1. Front wheel: Place the airbag jack on the lower support arm or frame position to easily lift one side of the vehicle, as shown in the following figure:

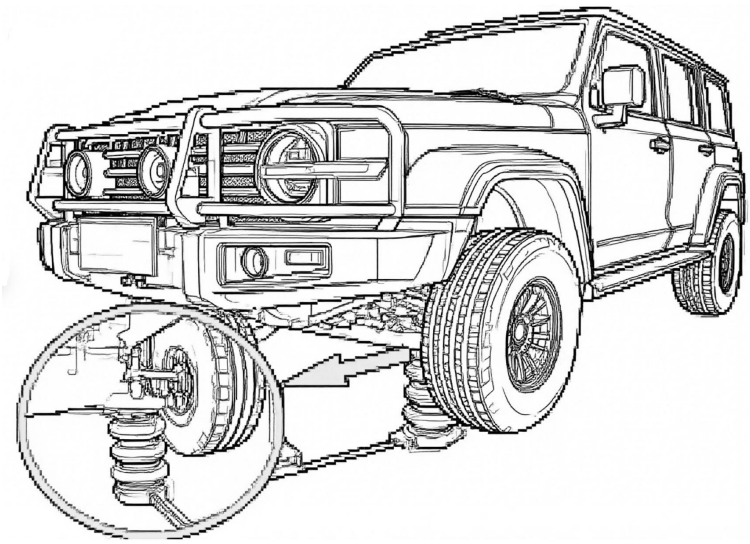

2. Rear wheel: Place the airbag jack in the rear suspension position to easily lift the rear of the vehicle, as shown in the following figure:

